KONGUNADU COLLEGE OF ENGINEERING AND TECHNOLOGY

(AUTONOMOUS)
NAMAKKAL- TRICHY MAIN ROAD, THOTTIYAM
DEPARTMENT OF COMPUTER SCIENCE AND ENGINEERING
20EC5010E- SENSORS AND TRANSDUCERS
YEAR/SEM-III/VI
UNITWISE HANDOUT

UNIT-I

INTRODUCTION

Basics of Measurement -Classification of error -Error analysis-Static and dynamic characteristics of transducers-Performance measures of sensors-Classification of sensors-Sensor calibration techniques Sensor output signal types

INTRODUCTION

The measurement of a given quantity is essentially an act or the result of comparison between the quantity (whose magnitude is unknown) and a predefined standard.

Since two quantities are compared, the result is expressed in numerical values.

In fact, measurement is the process by which one can convert physical parameters to meaningful numbers.

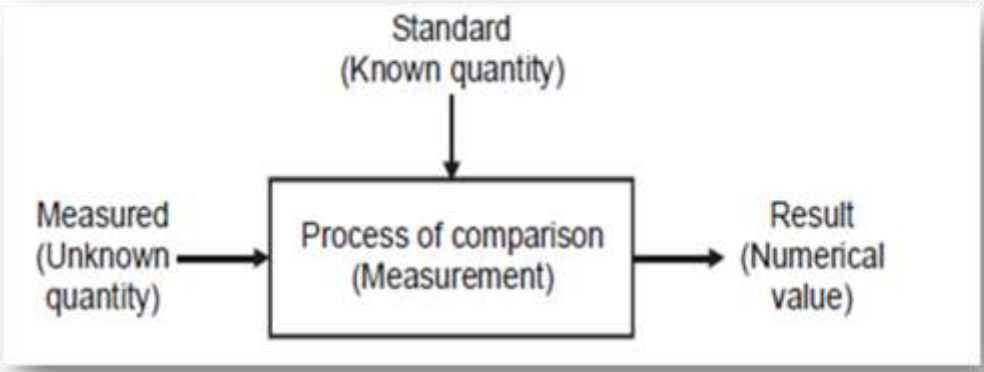

The measuring process is one in which the property of an object or system under consideration is compared to an accepted standard unit, a standard defined for the particular property.

Since two quantities, the amount of which is unknown and other quantity whose amount is known are compared, the result is expressed in terms of a numerical values.

Basic requirements:

1.The standard used for comparison purpose must be accurately defined and should be commonly accepted.

2. The apparatus used and the method adopted must be provable.

BASICS OF MEASUREMENT

Measurements is a vast field which embraces detection, acquisition control and analysis of data.

It involves the measurement of physical, electrical, mechanical, optical and chemical quantities and plays a very significant role in every branch of scientific research and engineering process which include control systems, process Instrumentation and data reduction.

There are two major function of all branch of engineering

Design of equipment and processes and

Proper operation control and maintenance of process.

METHODS OF MEASUREMENTS

The methods of measurements may be broadly classified into two categories.

(i) Direct methods

The unknown quantity (also called the measurand) is directly compared against a standard.

The result is expressed as a numerical number and a unit.

Direct methods are quite common for the measurement of physical quantities like length, mass and time.

(ii) Indirect methods

Measurements by direct methods are not always possible, feasible and practicable. These methods in most of the cases, are inaccurate because they involve human factors.

They are also less sensitive.

Hence direct methods are not preferred and are less commonly used.

A measurement system consists of a transducing element which converts the quantity to be measured into an analogous signal.

The analogous signal is then processed by some intermediate means and is then fed to the end devices which present the results of the measurements.

PRIMARY, SECONDARY AND TERTIARY MEASUREMENTS

Measurements may be classified as primary, secondary and tertiary based upon whether direct or indirect methods are used.

1.Primary Measurements

A primary measurement is one that can be made by direct observation without involving any conversion (translation) of the measured quantity into length.

Typical examples of primary measurements are:

The matching of two lengths such as when determining the length of an object with a meter rod.

ii) The matching oof red hot met

iii) The counting of strokes of a clock chime to measure the time.

2.Secondary Measurement:

A secondary measurement involves only one translation (conversion) to be done on the quantity under measurement to convert it into a change of length.

The measurement quantity may be pressure of gas, and therefore, may not be observable.

Therefore, a secondary measurement requires,

i) An instrument which translates pressure changes into length changes.

ii) A length scale or a standard which is calibrated in length units equivalent to known changes in pressure.

Therefore, in a pressure gauze, the primary signal (pressure) is transmitted to a translator and the secondary signal (length) is transmitted to observer's eye.

3. Tertiary Measurement

A tertiary measurement involves two translations. A typical example of such a measurement of temperature of an object by thermo couple.

The primary signal (temperature of object) is transmitted to a translator which generates a voltage which is a function of the temperature. Therefore, first translation is temperature to voltage.

The secondary translation is then voltage into length. The tertiary signal (length change) is transmitted to the observer's brain.

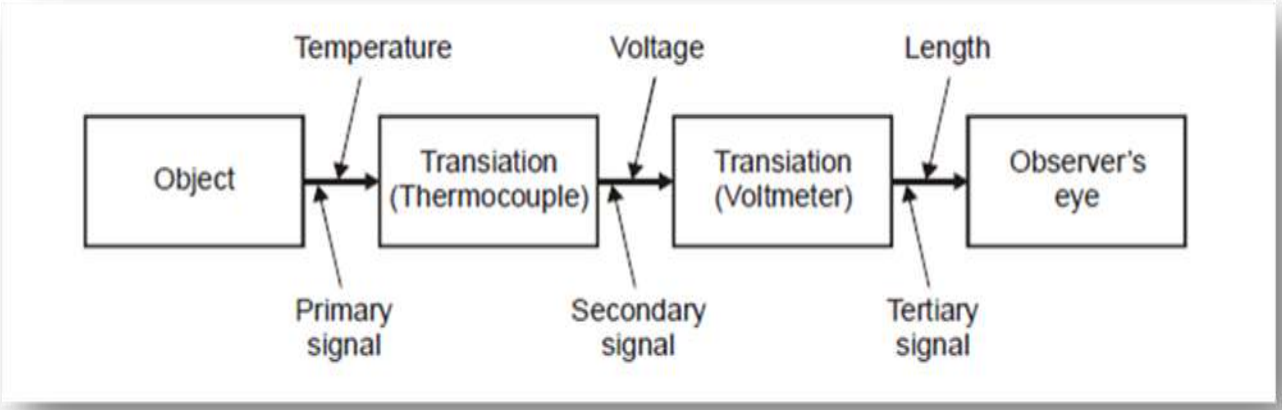

Functions of Measurement System

1. Indicating Function:

Instruments and systems use different kinds of methods for supplying information concerning the variable quantity under measurement.

Most of the time this information is obtained as a deflection of a pointer of a measuring instrument.

Example:

The deflection of pointer of a speedometer indicates the speed of the automobile at that moment. A pressure gauge is used for indicating pressure.

2. Recording function

In many cases the instrument makes a written record, usually on paper, of the value of the quantity under measurement against time or against some other variables. Thus the instrument performs a recording function.

Example:

A potentiometric type of recorder used for monitoring temperature records the instantaneous values of temperature on a strip chart recorder.

3.Controllingfunction

This is one of the most important functions especially in the field of industrial control processes. In this case, the information is used by the instrument or the system to control the original measured quantity.

The instruments whose functions are mainly indicating and recording especially these instruments which are used for engineering analysis purpose.

Example:

Controlling instruments are thermostats of temperature control and floats for liquid level control.

Applications of Measurement Systems:

1.Monitoring of processes and operation:

There are certain applications of measuring instruments that have essentially a monitoring function. They simply indicate the value or condition of parameter under study and their readings do not serve any control functions.

Example:

An ammeter or a voltmeter indicates the value of current or voltage being monitored (measured) at a particular instant.

Similarly, water and electric energy meters installed in homes keep track of commodity used so that later on its cost may be computed to be realized from the user.

2. Control of processes and operation:

A very useful application of instrument is in automatic control systems.

There has been a very strong association between measurements and control.

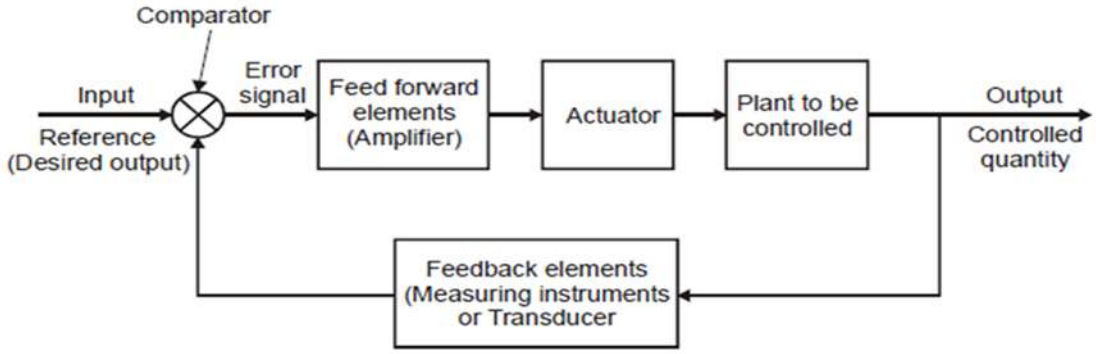

3.Experimental engineering analysis

For solution of engineering problems, theoretical and experimental methods are available.

The relative affectability of the method depends upon the nature of the problem.

Experimental engineering analysis has many uses and some are listed below.

i) Testing the validity of theoretical prediction

ii) Formulations of generalized empirical relationship in cases where no

proper theoretical backing exists.

iii) Determination of system parameters, variables and performance indices.

iv) For development in important spheres of study where there is sample

scope of study.

v) Solutions of mathematical relationships with the help of analogies.

CLASSIFICATION OF ERRORS

Errors in a measurement system can be classified into following categories

Gross errors

Systematic errors

Instrumental error

Environmental error

Observational error

Random errors

1.Gross Error

This class of errors mainly covers human mistakes in reading instruments, recording and calculating measurement results.

The causes of these errors are as follows,

1. Misreading of the instruments

2. Incorrect adjustments

3. Improper application of the instruments.

Gross error can be avoided by adopting two means.

i) Great care should be taken in reading and recording the data.

ii) Two, three or even more readings should be taken for the quantity under measurement.

2.Systematic errors

a.Instrumental Errors

These errors arise due to three main reasons

(i) Due to inherent shortcoming in the instruments

These errors are inherent in instruments because of their mechanical structure. They may be due to construction, calibration or operation of the instruments or measuring devices. These errors may cause the instrument to read too low or too high.

The possibility of such errors as it is often possible to eliminate them, or at least reduce them to a great extent by using the following methods.

a) The procedure of measurement must be carefully planned. Substitution methods or calibration against standard may be used for the purpose.

b) Correction factors should be applied after determining the instrumental errors.

c) The instrument may be re-calibrated carefully.

(ii) Due to misuse of the instruments

The errors caused in measurements are due to the fault of the operator than that of the instrument. A good instrument used in an unintelligent way may give erroneous results.

(iii) Due to loading effects of instruments

One of the most common errors committed by beginners, is the improper use of an instrument for measurement work.

2. Environmental Errors

These errors are due to external condition to the measuring device including conditions in the area surrounding the instrument.

These may be effects of temperature, pressure, humidity, dust, vibrations or of external magnetic or electrostatic fields. The corrective measure employed to eliminate or to reduce these undesired effects are

Arrangements should be made to keep the conditions as nearly as

constant as possible.

Using equipment which is immune to these effects.

Employing techniques which eliminate the effects of these disturbances

3. Observation Errors

These are the errors introduced by the observer. There are many sources of observational errors such as parallax error while reading a meter, wrong scale selections, the habits of individual observers etc.,

To eliminate such observational errors, one should use the instruments with mirrors, knife edged pointers etc.,

Now a days, the instruments with digital display of output which completely eliminates the errors on account of human

Observational or sensing powers as the output is in form of digits.

4.Random Errors

Random errors are generally unpredictable errors, and they occur even when all systematic errors are accounted for although the instrument is selected properly based on the nature of measurement,

pre-calibration of the instrument is properly done before the measurement and there is an environmental control, random errors will be there.

However, these errors can be minimized by taking more number of readings and using proper statistical methods for obtaining the best approximation of the true value.

ERROR ANALYSIS

Due to the presence of the random errors in any measurement systems, the uncertainty associated with any measurement cannot be predetermined.

Only the probable value of the error an be specified using statistical error analysis.

1.Probable Error

The data collected from any measurement can be pictorially represented by a histogram for a better visual appeal and quick understanding of information.

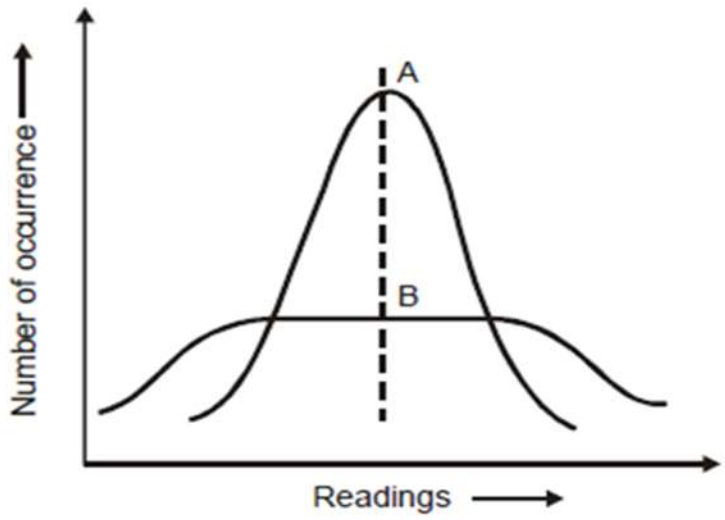

2. Limited Error

Generally the accuracy of a measuring instrument is usually specified by its manufacturer as a percentage of the full scale readings.

But there is a possibility of getting the percentage error for various values of readings taken will be more than the percentage specified.

3. Odds and Uncertainty

The specification of limiting error is in itself uncertain since the

manufacture themselves are not sure about the accuracy due to the presence of random errors in the measurement.

4. Propagation of Errors

If many number of instruments are to be used any measurement in order to compute a quantity, the overall limiting error should be computed from the individual limiting errors of the instruments.

STATIC AND DYNAMIC CHARACTERISTICS OF TRANSDUCERS

1. Static Characteristic

The main static characteristics discussed here are,

i) Accuracy

ii) Sensitivity

iii) Reproductively

iv) Drift

v) Static Error

vi) Dead Zone

The qualities (i), (ii) and (iii) are desirable, while qualities (iv), (v)

and (vi) are undesirable.

1. Accuracy and Precision

i) Accuracy

It is the closeness with which an instrument reading approaches the true value of the quantity being measured. Thus accuracy of a measurement means conformity to truth.

ii) Precision

It is a measure of the reproducibility of the measurements, i.e., given a fixed value of a quantity, precision is a measure of the degree of agreement within a group of measurements. The term 'precise' means clearly or sharply defined.

2. Sensitivity

The sensitivity of any instrument is stated as an ability to detect changes in the measured quantity. It can be defined as the slope of the calibration curve, if the input/output relationship is linear. The sensitivity of an instrument is also referred to the true quantity that is being measured.

$$\text{Sensitivity} = \frac{\text{Change in output unit}}{\text{Change in input unit}} = \frac{\Delta \theta_o}{\Delta \theta_i}$$

3. Repeatability and Reproducibility:

Repeatability describes the closeness of output readings,when the same input is applied repetitively over a short period of time with the same measurement conditions, same instrument and observer, same location and same conditions of use maintained throughout.

Reproducibility describes the closeness of output readings for the same input when there are changes in the method of measurement, observer, measuring instrument, location, condition of use and time of measurement.

4. Drift

All calibrations and specifications of an instrument are only valid under controlled conditions of temperature, pressure etc., These standard ambient conditions are usually defined in the instrument specifications. As variations occur in ambient temperature etc.,

Drift may be classified into three categories

i) Zero Drift

If the whole calibration gradually shifts due to slippage, permanent set or due to undue warming up of electronic tube circuits, zero drift sets in.

ii) Span Drift or Sensitivity Drift

If there is proportional change in the indication all along the upward scale, the drift is called span drift or sensitivity drift.

iii) Zonal Drift

In case the drift occurs only over a portion of span of an instrument, it is called zonal drift.

There are many environmental factors which cause drift. They may be stray electric and magnetic fields, thermal emfs, change in temperature, mechanical vibrations, wear and tear and high mechanical stresses developed in some parts of the instruments and systems.

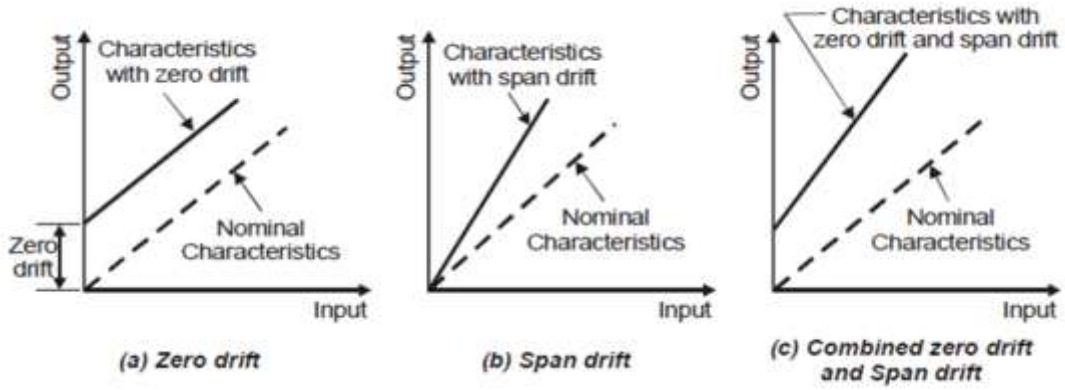

5. Static Error

Static error is defined as the difference between the measured value and the true value of quantity then.

$\delta A = A_m - A_t$

$\delta A =$ Error

$A_m =$ Measured value of quantity

$A_t =$ True value of quantity

6. Dead Zone

Dead zone is defined as the largest change of input quantity for which there is no output of the instrument. The factors which produce dead zone are friction, backlash and hystersis in the instrument.

Dynamic Characteristics:

The dynamic characteristics of an instrument refers to performance of the instrument when it is subjected to time varying input. The performance criteria based upon the dynamic relation constitute the dynamic characteristics.

The dynamic characteristics of a measurement system are:

Speed of response

It is defined as the rapidity with which a measurement system responds to changes in the measured quantity.

Measuring log

It is the retardation or delay in the response of a measurement system to change in the measured quantity.

The measuring lags are of two types,

i) Retardation type ii) Time delay type

i) Retardation Type

In this case the response of the measurement system begins immediately after a change in measured quantity has occurred.

ii) Time Delay Type

In this case the response of the measurement system begins after a dead time after the application of the input. Dead time simply shift the response of the system along the time scale and causes a corresponding dynamic error.

Fidelity

It is defined as the degree to which a measurement system indicates changes in the measured quantity without any dynamic error.

Dynamic error

It is the difference between the true value of quantity (under measurement)

changing with time and the value indicated by the measurement system. If no static error is assumed. It is also called measurement error.

PERFORMANCE MEASURES OF SENSORS

Types of Input

The type of input, which can be any physical quantity, is generally determined in advance.

1. Operating Range

Choice of transducer depends upon the useful range of input quantity.

2. Loading Effect

The transducer, that is selected for a particular application should ideally exact no force, power or energy from the quantity under measurement in order that is measured accurately.

3. Response of Transducer to Environmental Influences

It should not be subjected to any disturbances like stray electromagnetic and electrostatic fields, mechanical shocks and vibrations temperature changes, pressure and humidity changes, changes in supply voltage and improper mechanical mountings.

4. Accuracy and Repeatability

High accuracy ensures that frequent calibration is not required and errors are less. Repeatability is more important than accuracy.

Type of Electrical Output

The type of output which may be available from the transducers may be available from the transducers may be a voltage, current, impedance or a time function of these amplitudes.

1. Sensitivity

The transducers must be sensitive enough to produce detectable output.

2. Output Impedance

Ideally the value of output impedance should be zero if no loading effects are there on the subsequent stage.

3. Useful Output Range

The output range of a transducer is limited at the lower end by noise signal.

The upper limit is set by the maximum useful input level.

4. Usage and Ruggedness

The ruggedness both mechanical and electrical intensities of the transducer versus its size and weight must be considered.

III.Electrical Aspects

Attention must be paid to signal to noise ratios in case the transducer is to be used in conjunction with amplifiers.

1. Stability and Reliability

The transducer should exhibit a high degree of stability during its operation and storage life.

CLASSIFICATION OF SENSORS

1. Direct Sensor

A sensor that can convert a non-electrical stimulus into an electrical signal with intermediate stage. Example : Thermocouple (temperature to voltage)

2. Indirect Sensor

A sensor that multiple conversion steps to transform the measured signal into an electrical signal.

Based on physical law or convent distinguishing property:

Active and passive sensor

Contact and non contact sensor

Absolute and relative sensor

Analog and digital sensor

Active and Passive Sensor

1. Active Sensor

A sensor that requires external power to operate.

Example:

Carbon microphone, thermistor, strain gauges, capacitive and inductive sensors, etc.,

The active sensor is also called as parametric sensor (output is a function of a parameter like resistance).

2. Passive Sensor

It generates its own electric signal and does not require a power source.

Example:

Thermocouples, magnetic microphones, piezoelectric sensors, photodiode.

Also called as self generating sensors.

Contact and Non Contact Sensor

Contact sensor is a sensor that requires physical contact with the stimulus.

Example : Strain gauges, temperature sensor

Non contact sensor does not requires no physical contact.

Example: Most optical and magnetic sensors, infrared

thermometer, etc.,

1.7.3 Absolute and Relative Sensors

1. Absolute Sensors

A sensor that reacts to a stimulus on an absolute scale such as thermistor, strain gauge, etc., (thermistor always reads the absolute temperature).

2. Relative Sensors

The stimulus is sensed relative to a fixed or variable reference, for example thermocouple measures the temperature difference, pressure is often measured relative to atmospheric pressure.

Analog and Digital Sensors

Analog sensors have an output that changes over a range of values while digital sensors are binary and only have two states ON and OFF.

The anemometer is an example of an analog device. Since its rotating speed increases along with wind speed. Therefore, it can produce a range of value.

An occupancy sensor is an example of a digital device, since it can only detect two states , empty room and occupied room.

Application of Sensors

1.Classification based on broad area of detection like electric sensors, magnetic, electromagnetic, acoustic, chemical, optical, heat, temperature, mechanical, radiation, biological, etc.,

2. Classification based on physical law like photoelectric, magneto electric, thermoelectric, photoconductive, photo magnetic, thermo magnetic, thermo-optic, electrochemical, magnetro resistive, photo elastic, etc.,

3. Classification based on specification like accuracy, sensitivity, stability, response time, hysteresis, frequency response, input, resolution, linearity, hardness, cost size, weight, conduction material, temperature,etc.

SENSOR CALIBRATION

Techniques of Sensors

1. Why do we need to calibrate sensors?

In order to achieve the best possible accuracy a sensor should be calibrated in the system where it will be used this is because.

i) No Sensor is Perfect

ii) The sensor is only one component in the measurement

2. What makes a good sensor?

The two most important characteristics of a sensor are:

i) Precision

The ideal sensor will always produce the same output for the same input.

ii) Resolution

A good sensor will be able to reliably detect small changes in the measured parameter.

Calibration Methods:

The three different types of calibration are,

1.One point calibration

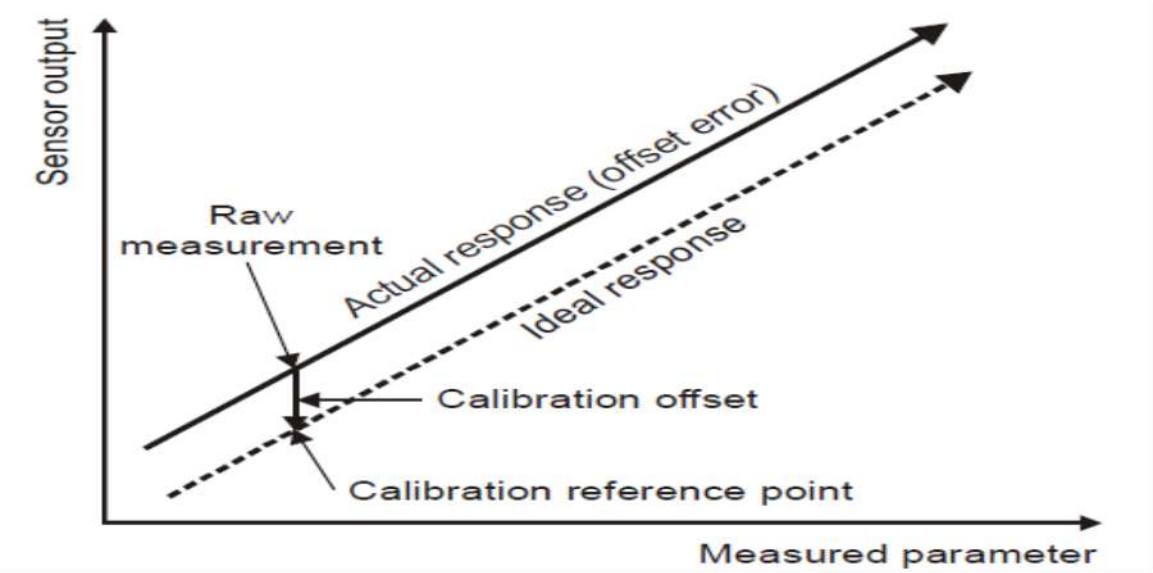

One point calibration can be used to correct for sensor offset errors in the

following cases.

i) Only One Measurement Point is Needed

ii) The Sensor is Known to be Linear and Have the Correct Slope over

the Desired Measurement Range

2. Two point calibration

A two point calibration is a little more complex.

But it can be applied to

either raw or scaled sensor outputs.

A two point calibration essentially re-scales the output and is capable of correcting both slope and offset errors.

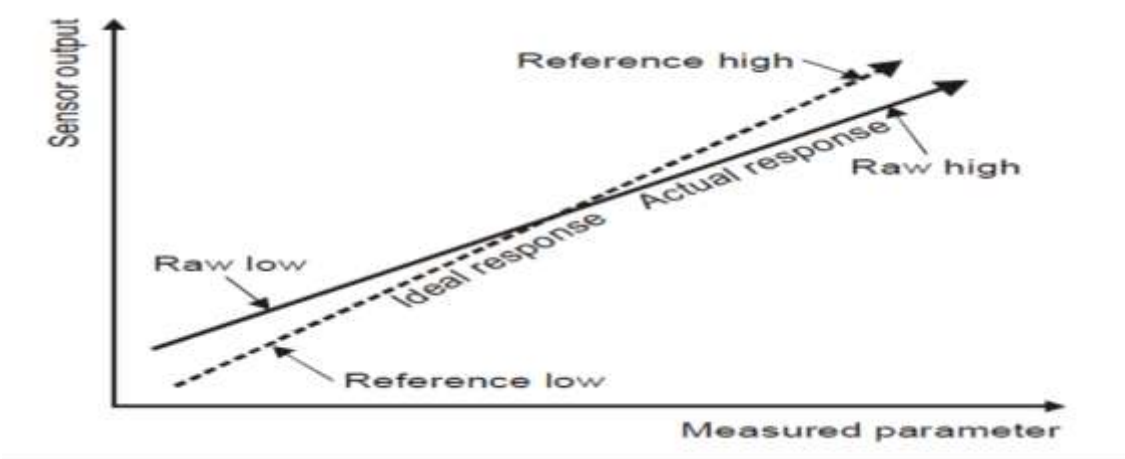

Multi point curve fitting:

Sensors that are non - linear over the measurement range require some curve-fitting to achieve accurate measurements over the measurement range.

A common case requiring curve-fitting is thermocouples at extremely hot or cold temperatures while nearly linear over a fairly wide range, they do deviate significantly at extreme temperature.

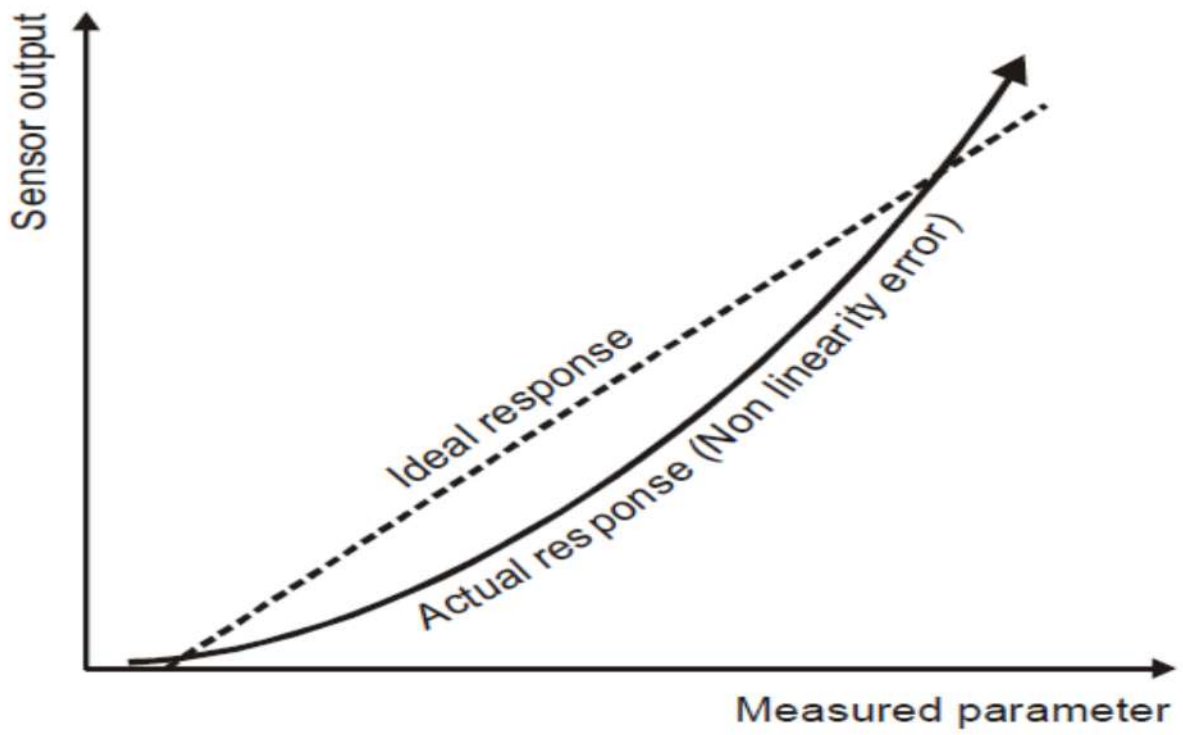

SENSOR OUTPUT SIGNAL TYPES

1.Analog Voltage

Sensor output an analog voltage proportional to some parameter which they are sensing. Figure below shows a typical analog transfer characteristics for a distance sensor.

Analog signals are much more susceptible to noise than digital signals, so there are several measures that must be taken to ensure the date obtained from the sensor is accurate.

The most common techniques for noise reduction are differential signal transmission and passive low pass filtration. Since we are using a microcontroller, it may be convenient to apply an IIR or an FIR filter, coded in software.

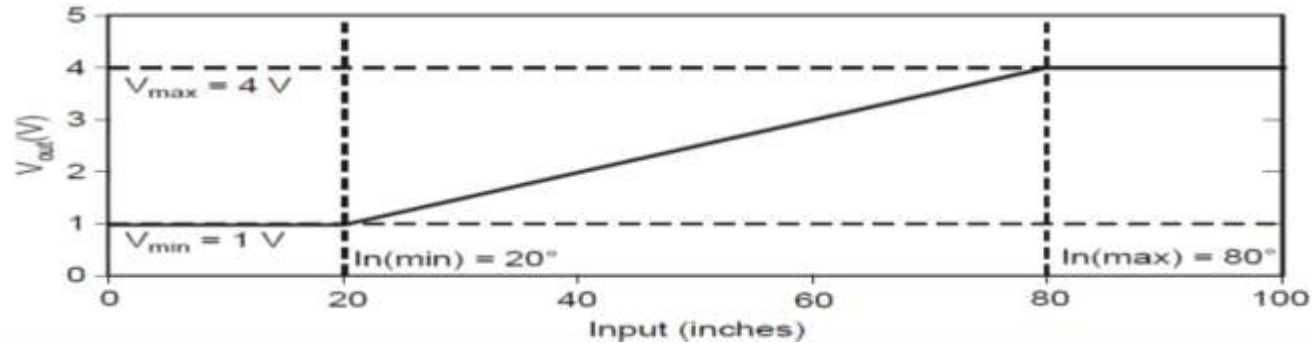

2.PWM

PWM is a popular technique for transmitting digital data in embedded system. A typical PWM

waveform is shown in below Figure for a digital sensor with an N bit resolution, the on time (TON) can take 2N different values. A change in, 1 LSB is signified by a small change in the on time.

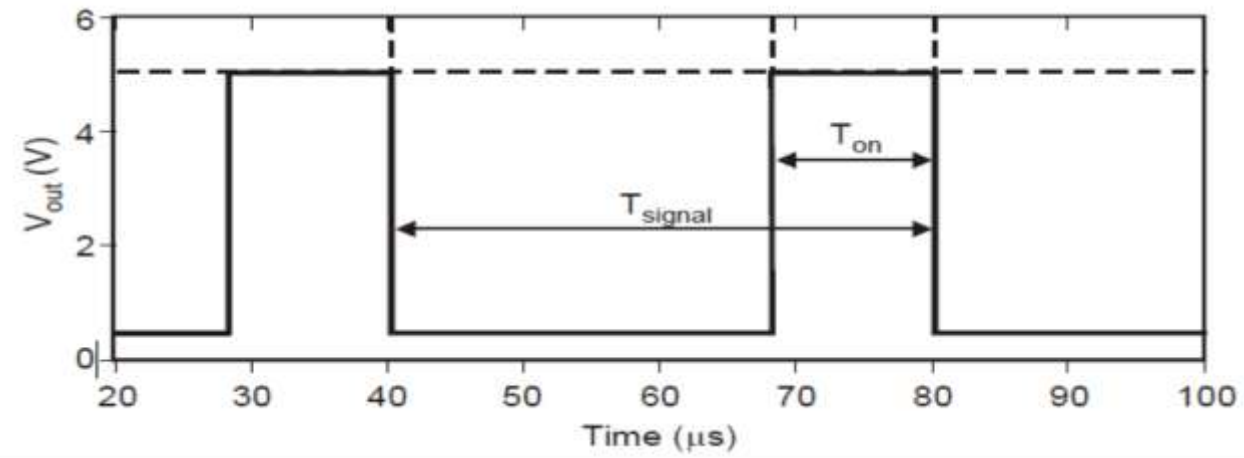

A PWM signal is much more immune to noise than an analog signal, but

signal integrity can still benefit from differential transmission (as in USB).

There is also a speed requirement : Any circuitry in between the sensor

and the microcontroller must exhibit short settling time to preserve fast signal edges. If the rise time of a PWM signal is too slow, it may not be possible to use.

3. Serial Digital

Serial digital signals are the most complicated. This type of signal requires that the devices sharing information are synced, and this is accomplished using one of many data packet protocols. An example is shown in below Figure.

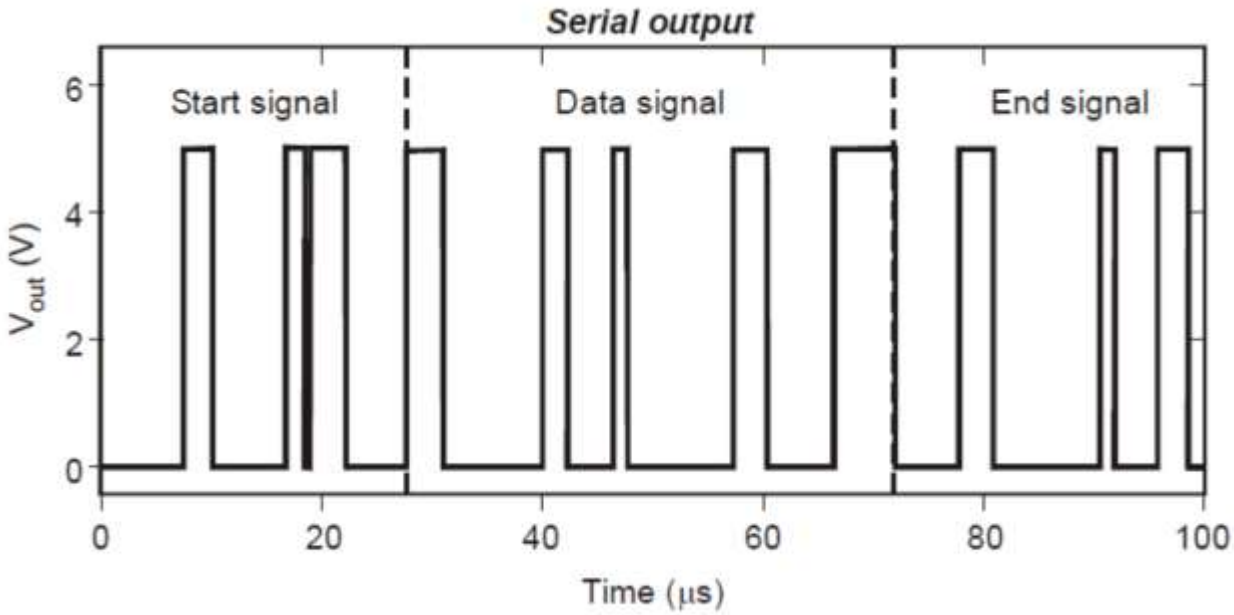

This is the type of signal used for communication between the arduino and a computer over USB.

In order to communicate the two devices must agree on the serial transmission protocol and the symbol rate (band).

Being a digital signal, the noise margining is quite high, but signal integrity is still substantially improved with differential transmission.

As with PWM, any signal conditioning circuitry must be fast to pressurising and falling edges.

UNIT-II

MOTION, PROXIMITY AND RANGING SENSORS

Motion sensors -Potentiometers –Resolvers-Encoders- Optical, Magnetic and Inductive Encoders-Linear Variable Differential Transformer (LVDT)-Rotary Variable Differential Transformer (RVDT) -Syncro, Microsyn, Accelerometer-GPS, Bluetooth-Range Sensors-RF beacons, Ultrasonic Ranging, Reflective beacons, Laser Range Sensor (LIDAR)

MOTION SENSORS

INTRODUCTION

The study of specific measuring devices with motion measurements.

Based on two fundamental quantities in nature (length and time) and so many other quantities (such as Force, Pressure and Temperature, etc) are often measured by transducing them to motion and then measuring this resulting motion.

It is mainly concerned with electromechanical transducers which convert motion quantities into electrical quantities.

POTENTIOMETERS

A resistive potentiometer consist of a resistance element provided with a movable contact.

The contact motion can be translation, rotation or a combination of the two (helical motion in a multiturn rotational device),thus allowing measurement of rotary and translatory displacements.

Translatory devices have strokes from about 2 to 500mm and rotational ones range from about 10 to as much as 60 full turns.

The cable-extension version allows very long travels (upto 40m) and convenient mounting in situations that might be awkward for other configuration.

Such devices are also available using digital encoders in place of the potentiometer or with both a potentiometer and a tachometer generator, giving position and velocity data.

The resistance element is excited with either D.C or A.C voltage and the output voltage is a (ideally) linear function of the input displacement.

Resistance elements in common use may be classified as

Wire –wound, conductive plastic, deposited film, hybrid or Cernet.

Potentiometer Displacement Transducer

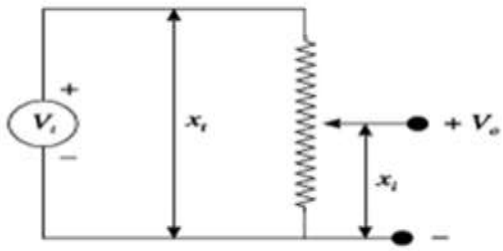

(a) Linear potentiometer

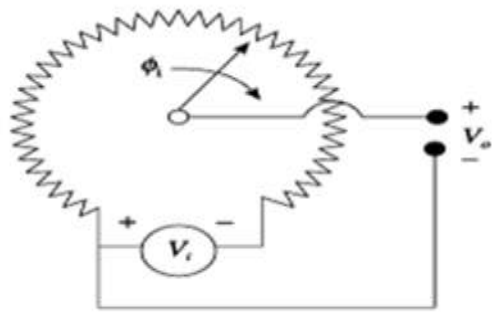

(b) Rotary potentiometer

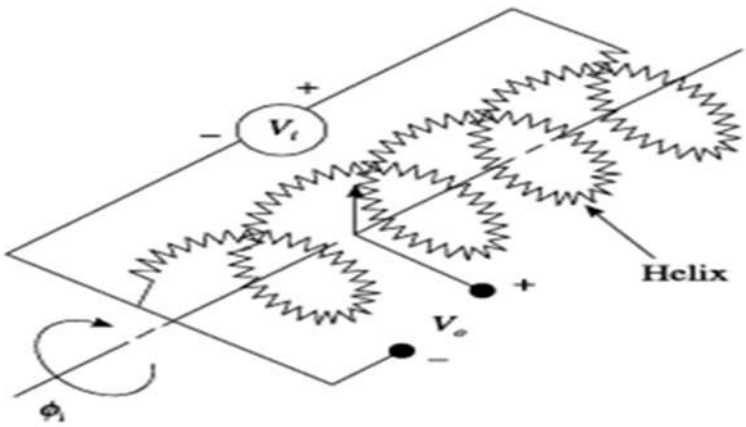

Multi-turn potentiometer.

If the distribution of resistance with respect to translational or angular travel of the wiper (moving contact) is linear, the output voltage eo will faithfully duplicate the input motion xi or θi , if the terminals at eo are open circuit.

The potentiometer output voltage is the input, to a meter or recorder that draws some current from the potentiometer.

From Fig.3.4, analysis of this circuit gives,

$$\frac{e_0}{e_{ex}} = \frac{1}{1 \Big/ \frac{\frac{x_i}{x_i+R_P}}{\left(\frac{R_m}{}\right)} \left(1-\frac{x_t}{x_i}\right)}$$

The above equation becomes ideal RP/Rm=0 for an open circuit conditions.

$$\frac{e_0}{e_{ex}} = \frac{x_i}{x_t}$$

For no “loading” , the input –output curve is a straight line. In actual practice, Rm ≠ α and equation 1 shows a non-linear between e0 and xi

To achieve good linearity, for a ‘meter’ of a given resistance Rm , choose a potentiometer of sufficiently low resistance relative to Rm .

If the heat dissipation is limited to P watts, the allowable excitation voltage is given by max

$$e_{xx} = \sqrt{PR_P}$$

LOADING EFFECT OF POTENIOMETER

If the distribution of resistance with respect to translational or angular travel of the wiper (moving contact) is linear, the output voltage eo will faithfully duplicate the input motion xi or □i, if the terminals at eo are open circuit (no current drawn at the output).

The potentiometer output voltage is the input, to a meter or recorder that draws some current from the potentiometer.

Thus, a more realistic circuit is shown in figure below.

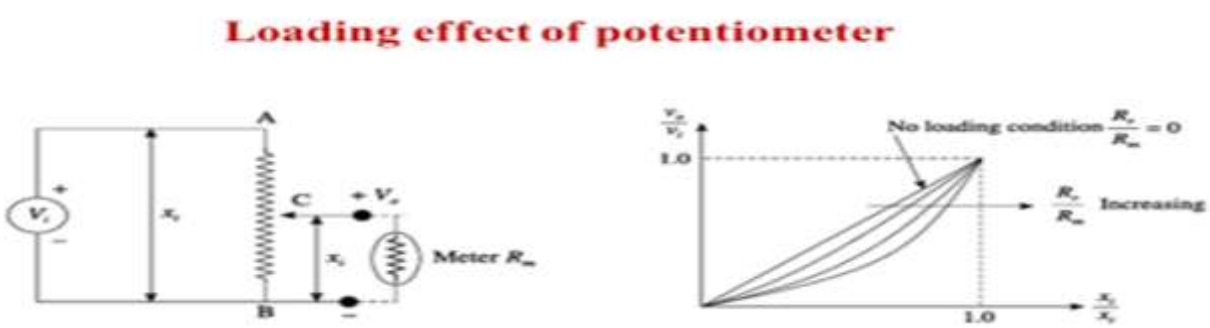

Wire –wound resistance shape

To get sufficiently high resistance values in small space, the wirewound

resistance element is widely used. The resistance wire is wound on a mandrel or card, which is then formed into a circle or helix, if a rotational device is desired

shown in figure below with such a construction, the variation of resistance is not a linear continuous change, but actually proceeds in small steps as the wiper moves from one turn of wire to the next.

This phenomenon results in a fundamental limitation on the resolution in terms of resistance wire size.

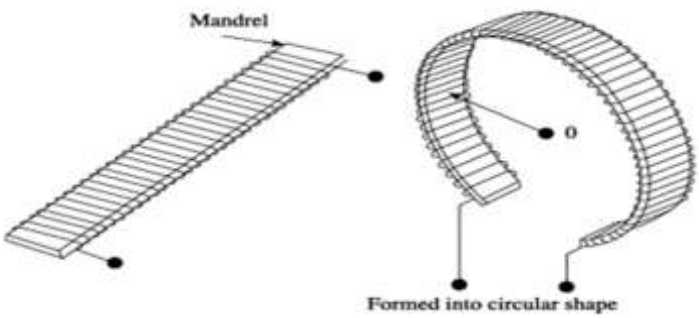

RESOLVERS:

Uses: For conversion of angular position of a shaft into cartesia co-ordinates.

The output of the transducer is in the form of two signals, one proportional to the sine of the angle and the other proportional to cosine of the angle.

A resolver is very precise electromagnetic device comprising of two stator and two rotor windings.

Construction:

The construction of a resolver is similar to that of a two phase, two pole wound rotor induction motor.

The stator windings are identical and are housed in a magnetic structure, with the axis of two windings 90^0 to each other.

Similarly , the two rotor windings are placed in a magnetic structure and are mutually perpendicular to each other.

WINDING CONFIGURATION OF RESOLVER

Stator windings are supplied with an alternating voltage that produces an alternating magnetic flux which induces voltages in the two rotor windings.

The output voltage of the rotor windings is proportional to the stator voltage and the coupling between stator and rotor windings.

The way in which the windings are placed, the rotor output voltages are proportional to the sine and cosine of the rotor angle.

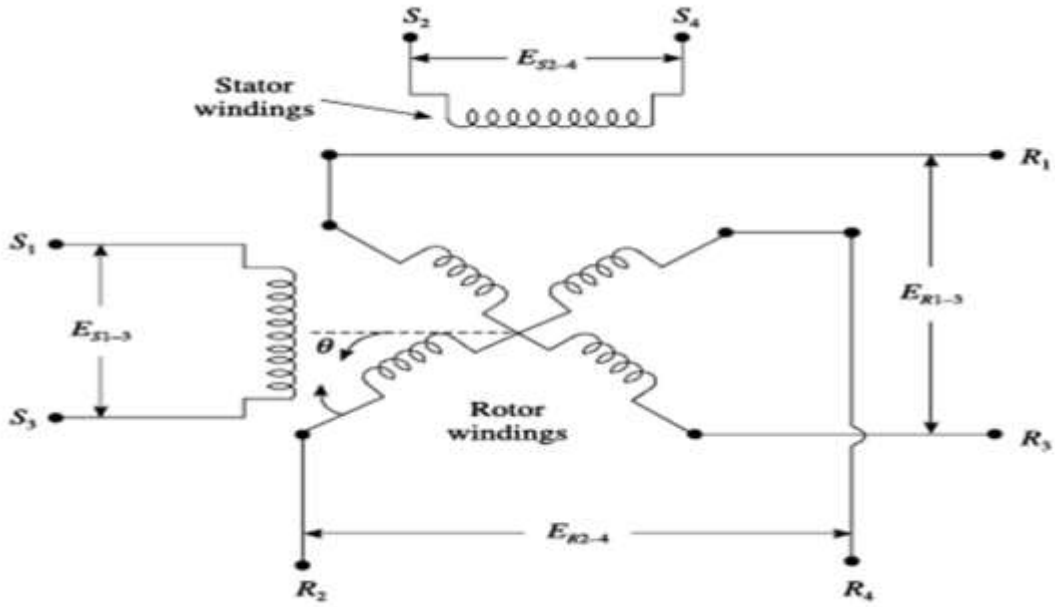

When one of the stator windings S1S3 is excited by an A.C source, with the other stator windings S2S4 short circuited, the following output voltage are obtained from the rotor.

ER 1-3 = ES 1-3 Cosθ ----------(1)

ER 2-4 = -ES 1-3 Sin θ ---------- (2)

When the two stator windings are excited, the outputs are us under

ER 1-3 = ES 1-3 Cosθ + ES 2-4 Sin θ ----------(3)

ER 2- 4 = ES 2-4 Cosθ - ES 1-3 sin θ ----------(4)

When the two rotor windings are excited , the output from the stator windings

ES 1-3 = ER1-3 Cosθ - ER 2-4 Sin θ ----------(5)

ES 2- 4 = ER 2-4 Cosθ + ER1-3 sin θ ----------(6)

where θ= angular displacement of rotor

Classification of Resolvers

I)Computing Resolvers:

Uses:

For generating sine, cosine and tangent functions as well as for solving geometric relationships.

II)Synchro resolvers:

Uses:

For data transmission

It perform the same functions as synchro transmitters, receivers and control transformers but with a better accuracy.

APPLICATIONS:

Vector Resolution

Vector Composition

Vector angle and component resolution

Pulse amplitude control and pulse resolution

Phase shifting

Classification of Encoders

Tachometer Encoders

Has only a single output signal which consists of a pulse for

Each increment of displacement. If the motion were always in one direction, a digital counter could accumulate these pulses to determine the displacement from a known starting point.

Any motion in the opposite direction would also produce identical pulses, which would produce errors.

This digital transducer is usually used for measurement of speed, rather than for displacement and in situations where the rotation never reverses.

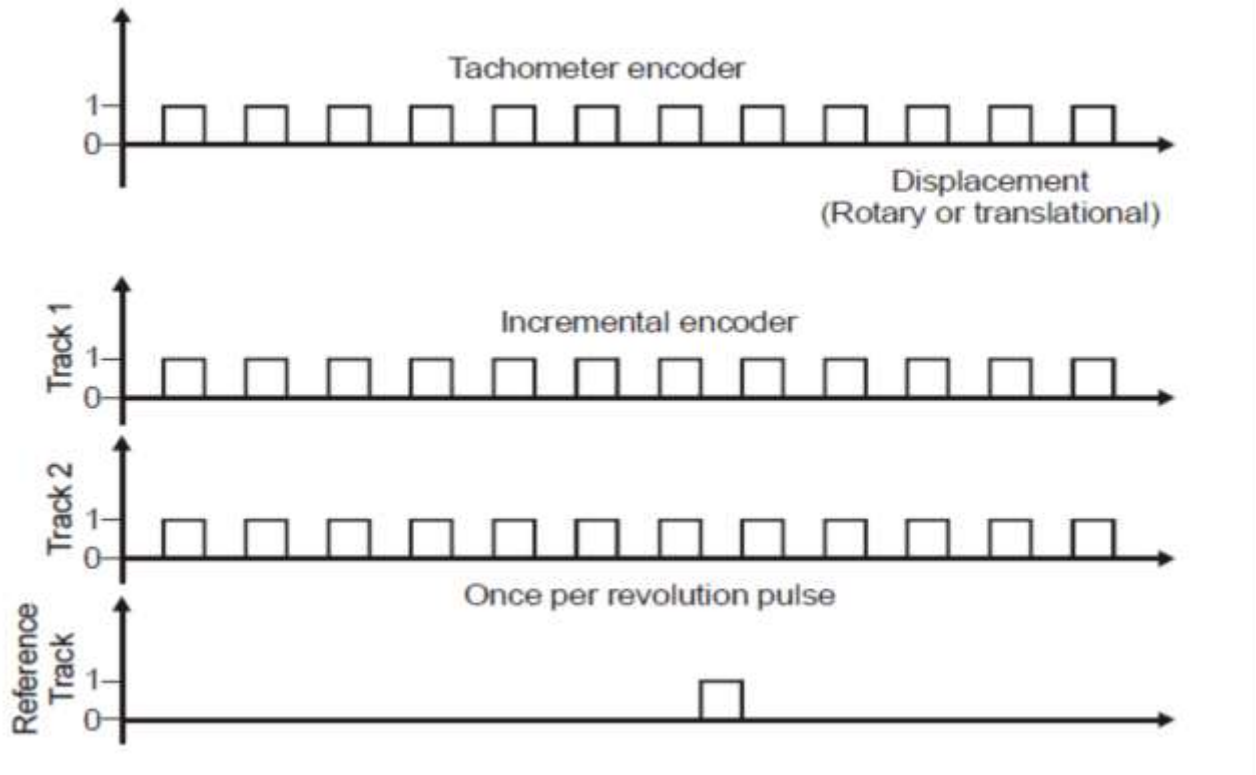

INCREMENTAL ENCODERS

The problems caused by reverse motion in the case of tachometer encoder are solved by using an incremental encoder.

The incremental encoder uses atleast two/ three signal generating elements.

The two tracks the tachometer encoder uses only one track in the case incremental encoder are mechanically shifted by ¼ cycle relative to each other.

This allows detection of motion which signal rises first thus an up down pulse counter can be used to substract pulses whenever the motion reverses.

A third output , which produces one pulse per revolution at a distinct point, is sometimes provided for Zero reference.

Advantage of Incremental encoder:

Able to rotate through as many revolutions as the application requires.

Any false pulse resulting from electric noise will errors that persist even when the noise disappears.

The failure of system power also causes total information about the position data which cannot be retrieved even after re-application of power.

ABSOLUTE ENCODERS

Generally limited to measurement of a single revolution.

They use multiple tracks and outputs, which are read out in parallel to produce binary representation of the angular shaft input position.

There is a one-to-one correspondence between binary output, position data are recovered when power is restored after an outage.

The transient electric noise causes only transient measurement errors.

Generally limited to measurement of a single revolution. They use multiple tracks and outputs, which are read out imparallel to produce binary representation of the angular shaft input position.

Since there is a one-to-one correspondence between binary output, position data are recovered when power is restored after an outage

LINEAR DISPLACEMENT DIGITAL TRANSDUCER

GRAY/BINARY CODE CONVERSIONS

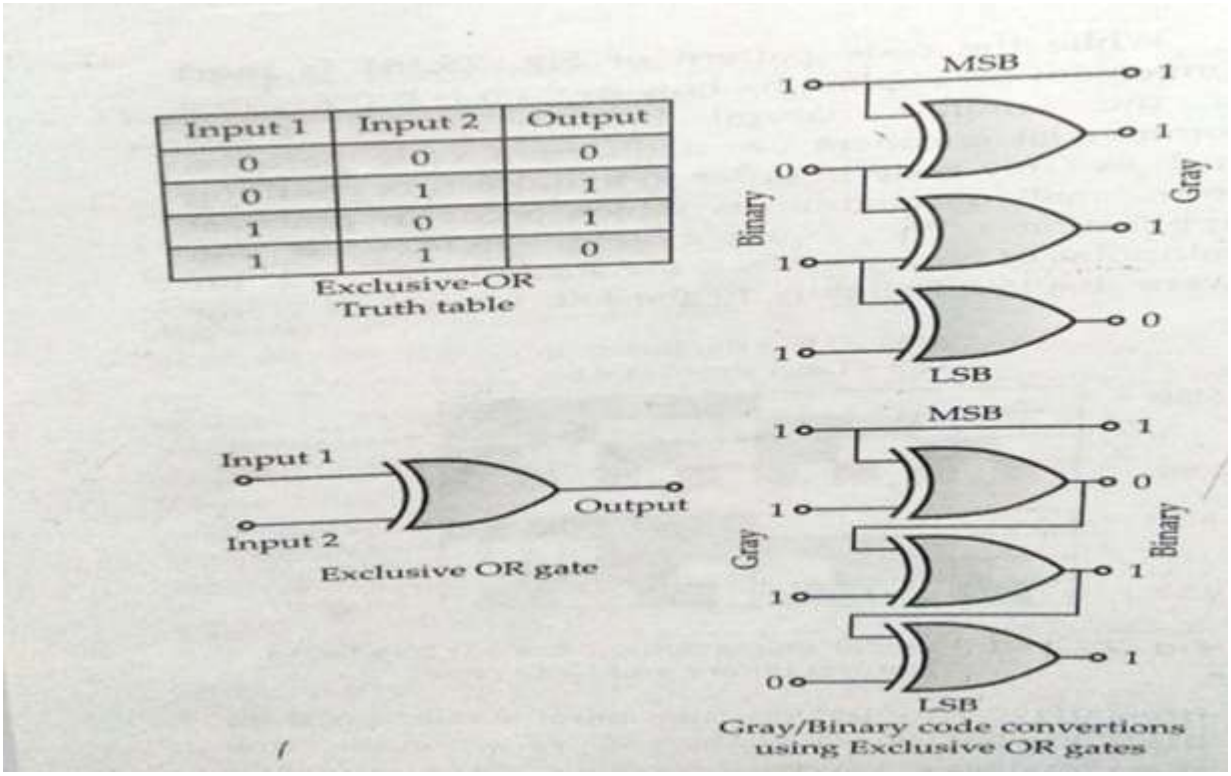

Input 1	Input 2	Output
0	0	0
0	1	1
1	0	1
1	1	0

Exclusive-OR Truth table

Gray/Binary code convertions using Exclusive OR gates

OPTICAL

Incremental Encoder:

Incremental encoders creates a series of equally spaced signals

corresponding to the mechanical increment required.

For example, if we divide a shaft rotation into 100 parts, an encoder would

be selected to supply 1000 square wave cycles per revolution. By using a counter to count these cycoles, we can find out how much the shaft has rotated

Optical encoders tend to follow one of two principles of operation;

They consist of either a system of coded tracks consisting of transparent and opaque section and associated lamps and photocells to detect the corresponding switchingsequence, or they rely on the use of more fringe techniques, capable of much higher resolution when used for incremental measurement

SHAFT ENCODERS

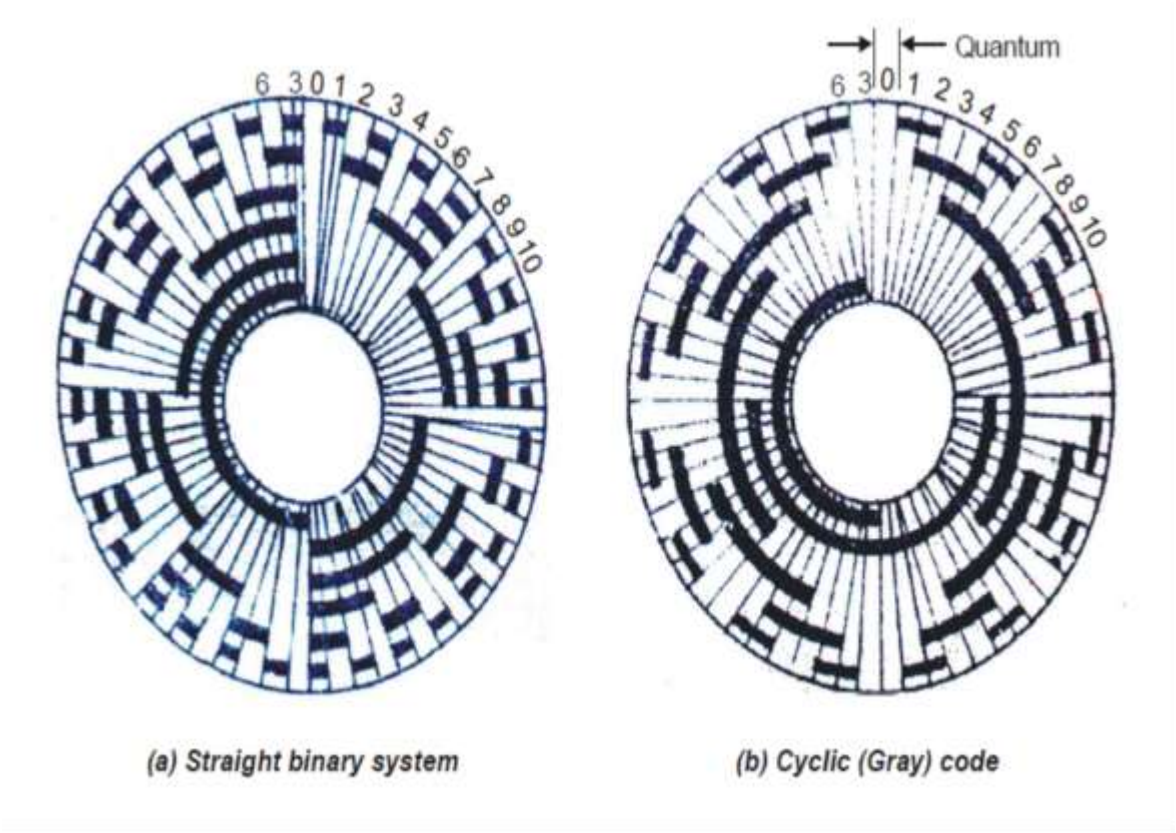

(a) Straight binary system (b) Cyclic (Gray) code

The absolute digitiser comprises an assembly consisting of a gray - coded

pattern photographically reproduce on a glass disc mounted on the input shaft.

The code consists of ten annular tracks each with a pattern of opaque and

transparent sections. The code reading system employs a filament lamp and collimating lens from which light passes through the disc and a narrow radial slit, to be detected by ten photovoltaic cells.

Depending on the angular position of the shaft, certain cells receive light from the transparent portions of the disc and enable the outputs from all ten cells to reproduce the shaft position directly in parallel - gray - coded form.

The output which is noise free, is suitable for amplification and subsequent processing for use in digital servo systems, computers, data logging and visual displays.

MAGNETIC ENCODER

In case of magnetic encoders, the conducting portions of the contacting type encoders are replaced by magnetic tape with magnetized portions and non conducting portions are represented by non-magnetized portions as shown in figure below.

For magnetizing the portions a coating of magnetic material powder is made.

The sensing section consists of toroidal cores, each provided with two coils, namely reading coil (R - coil) and Interrogate coil (I - coil).

These sensing coils are placed closer to the pattern of the magnetic encoder, but there is no contact with the encoder.

The detection of the magnetized portions saturates the toroidal core, and suitable output signal is generated.

When the interrogate coil is energized with a constant voltage signal of 200 KHz, the reading coil generates the output signals as a transformer action.

If the toroidal core is over the magnetized portion, the output signal from the R - Coil is low and when the core is over the non - magnetized portion, the output signal from the R - coil is high.

MAGNETIC ENCODER

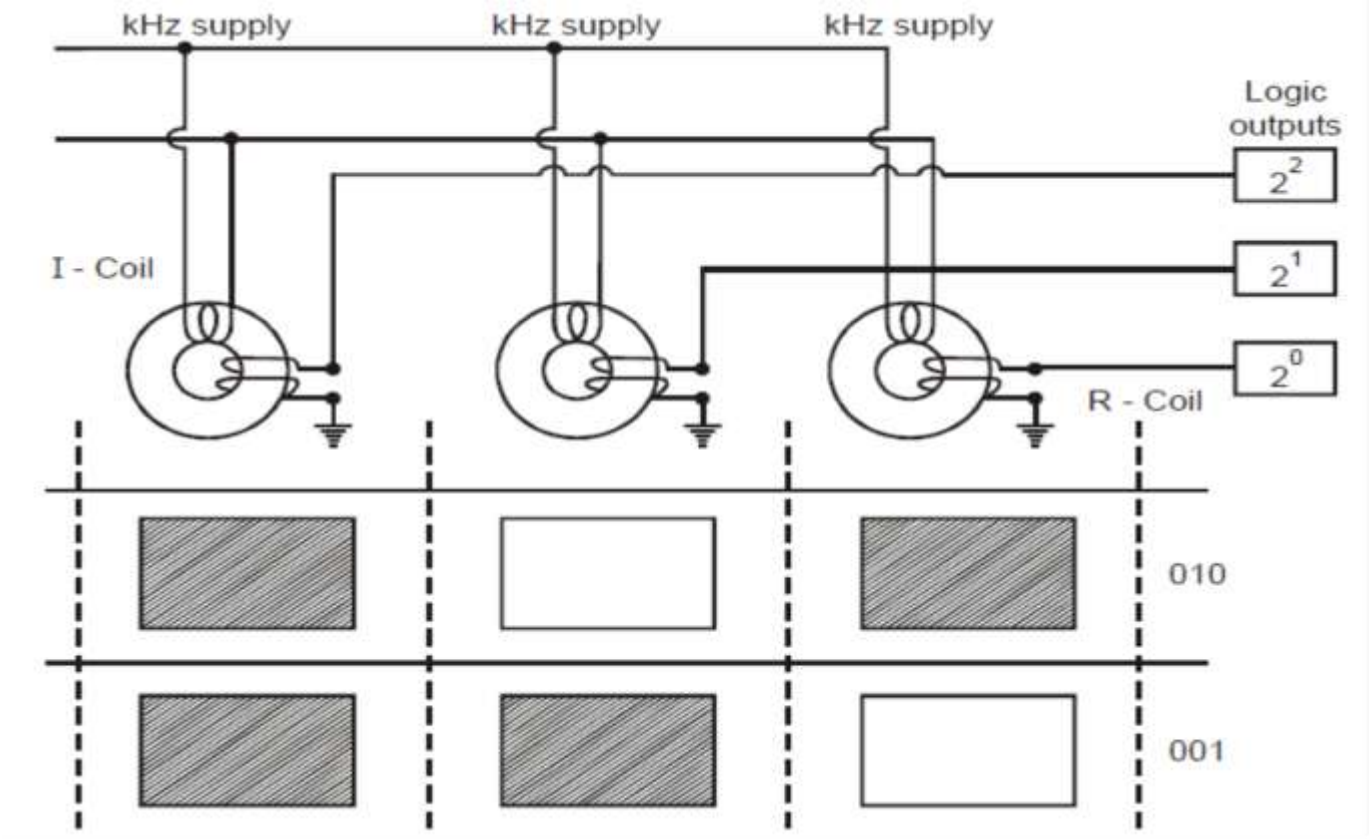

Hence, based on the presence and absence of the magnetized portions, the amplitudes of the output voltages will vary.

If there is low level output voltage, it can be represented by binary logic - 0, and if there is high level output voltage, it can be represented by binary logic - 1.

This kind of magnetic encoders are very resistant to dust, grease, moisture and other contaminants common in industrial environemnts and to shock and vibration. Hence its applications in industries are high.

INDUCTIVE:

i) Change of self inductance

The self - inductance of a coil

$$L = \frac{N^2}{R}$$

where N = number of turns and

R = reluctance of the magnetic circuit

$$R = \frac{\ell}{\mu A}$$

$$\therefore \text{ Inductance } L = N^2 \mu \left(\frac{A}{L}\right) = N^2 \mu G$$

where, μ = Effective permeability of the medium

ii) Mutual Inductance

The mutual inductance between the coils can be varied by variation of self inductances or the coefficient of coupling.

$$M = K\sqrt{L_1 L_2}$$

where L_1 and L_2 = self - inductance of two coils

K = Co - efficient of coupling

However, the mutual inductance can

be converted into a self inductance by connecting the coils in series. The self - inductance of such an arrangement varies L1 + L2 – 2 Mto L1 + L2 + 2 M with one of the coils being stationary while the other is movable. The self inductance of each coil is constant but the mutual inductanc changes depending upon the displacement of the movable coil.

iii) Production of Eddy Currents

These inductive transducers work on the principle that if a conducting plate is placed near a coil carrying alternating current, eddy currents are produced in the conducting plate.

The conducting plate acts as a short - circuited secondary winding of a transformer.

The eddy currents flowing in the plate produce a magnetic field of their own which act against the magnetic field produced by the coil. This results in reduction of flux and thus the inductance of the coild is reduced.

The nearer is the plate to the coil, the higher are the eddy currents and

thus higher is the reduction in the inductance of the coil. Thus the inductance

of the coil alters with variation of distance between the plate and the coil.

Types of Inductive Transducer

1.Air Cored Coils

Air cored coil transducers can be operated at a higher carrier frequency because of absence of eddy current losses in air cores.

The inductance of air cored coils is independent of the current carried by the coil as the permeability of air is constant and does not depend upon the current carried by the coil.

Hence air cored coil tranducer can be used for measurement of displacement variations occurring at fairly high frequencies.

2. Iron Cored Coils

The greatest disadvantage of iron cored coils transducers is that their inductance is not constant but depends upon the value of the current carried by the coil.

Also, at high frequencies, the eddy current loss tends to be high and therefore

iron cored coil transducers cannot be used beyond a particular frequency.

The frequency of supply voltage should not exceed 20 KHz for iron core transducer to keep the core losses to acceptable values.

CAPACITIVE TRANSDUCERS

$$\text{Capacitance } C = \frac{\varepsilon A}{d} = \frac{\varepsilon_r \varepsilon_o A}{d}$$

Where A = Overlapping are of plates ; m^2

d = Distance between two plates ; m

$\varepsilon = \varepsilon_r \varepsilon_o$ = Permitivity of medium ; $\frac{F}{m}$

ε_r = Relative permitivity

ε_o = Permitivity of free space

$= 8.85 \times 10^{-12}$ F/m

- The capacitance transducer works on the principle of change of capacitance which may be caused by

- Change in overlapping area A
- Change in the distance d between the plates
- Change in dielectric constant

- These changes are caused by physical variables like displacement, force and pressure in most of the cases.

- The change in capacitance may be caused by change in dielectric constant as is the case in measurement of liquid or gas levels.

Transducer using Change in Area of Plates

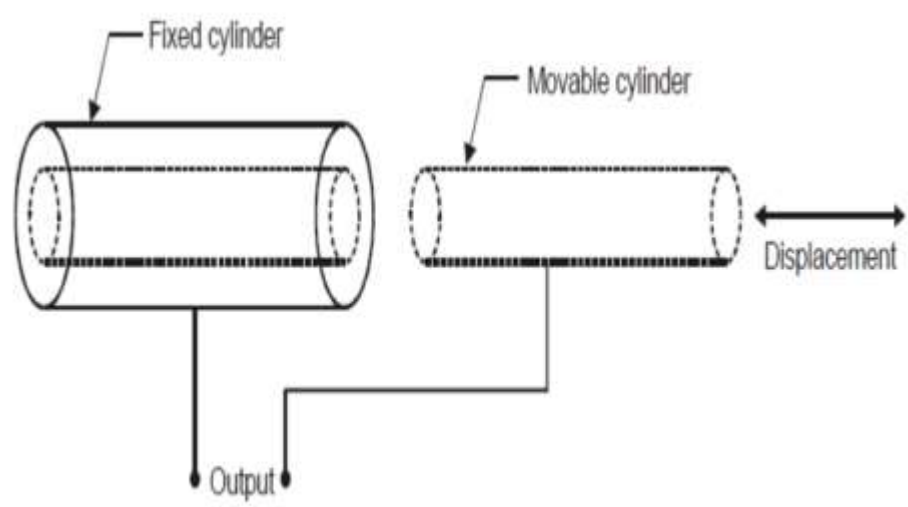

(a) Capacitive transducer of cylindrical type

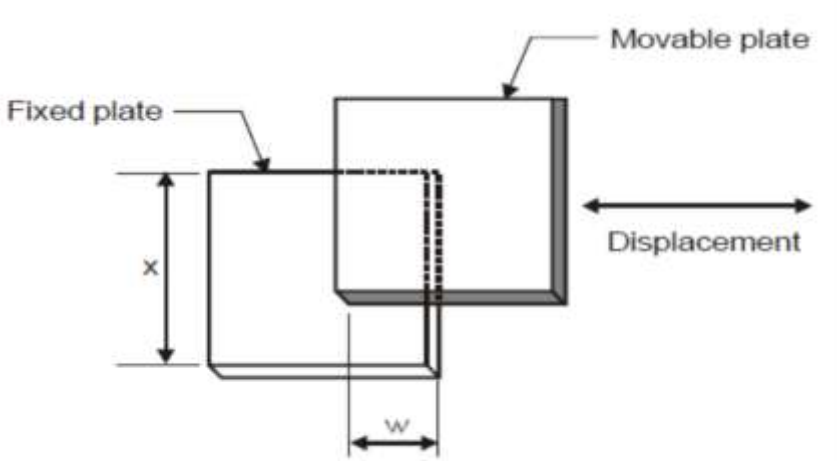

(b) Parallel plate capacitive transducer

Transducers Using Change in Distance Between Plates

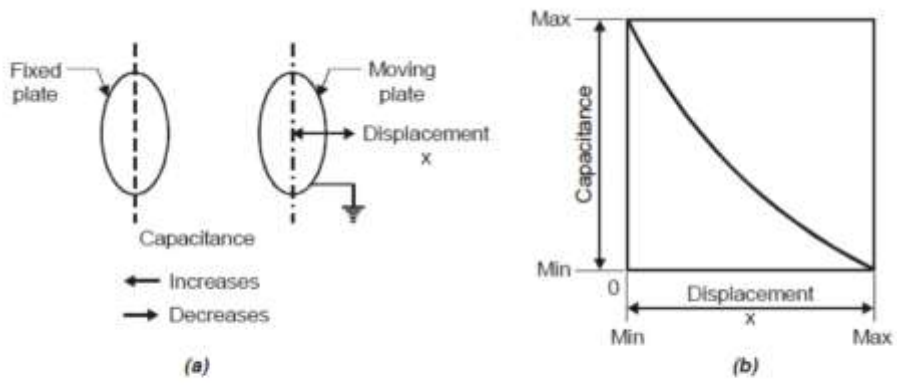

Capacitive Transducer using the Principle of Change of Capacitance with Change of Distance between Plates

Differential Arrangement of Capacitive Transducer

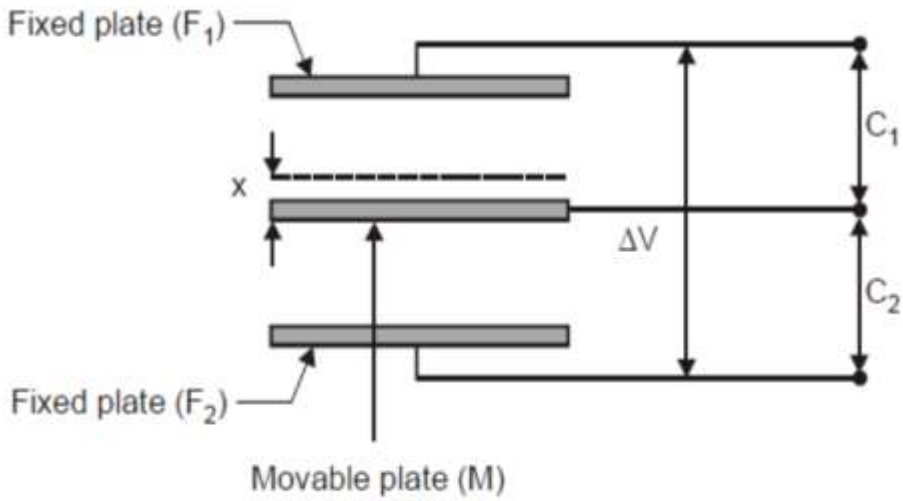

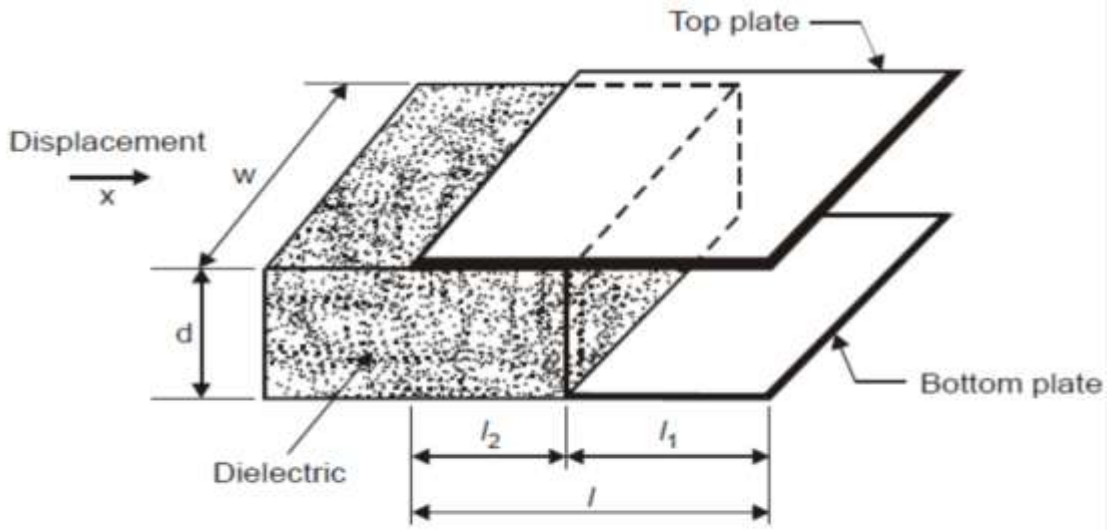

Capacitive Transducer using Principle of Change in Dielectric Constant for Measurement of Displacement

Variation of Dielectric Constant for Measurement of Liquid Level

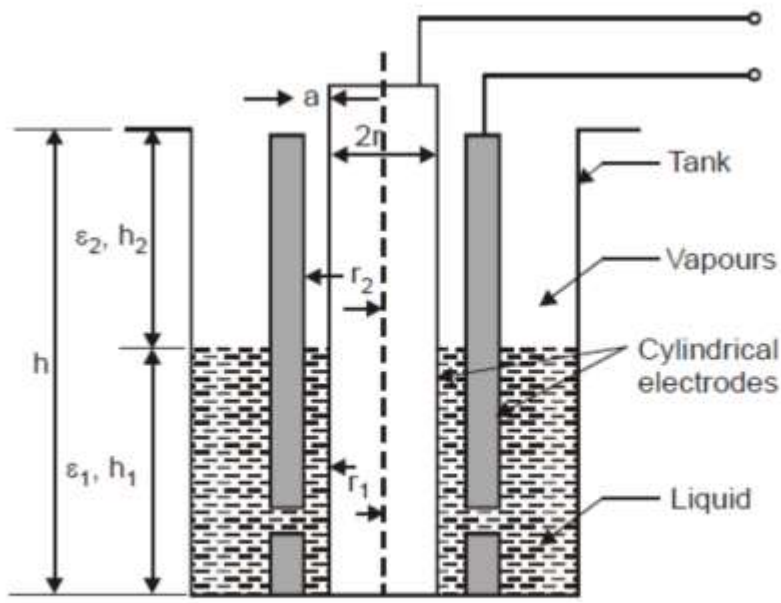

Capacitive Transducer for Measurement of Level of a non -conducting Liquid

LINEAR VARIABLE DIFFERENTIAL TRANSFORMER (LVDT)

The most widely used inductive transducer to translate the linear motion into electrical signal is the linear variable differential transformer (LVDT).

The transformer consist of a single primary winding P and two secondary windings S1 and S2 wound on a cylindrical former.

The secondary windings have equal number of turns and are identically placed on either side of the primary winding.

The primary winding is connected to an alternating current source.

A movable soft iron core is placed insider the former.

The displacement to be measured is applied to the arm attached to the soft iron core.

In order to overcome the problem of eddy current losses in the core, nickel - iron alloy is used as core material and is slotted longitudinally.

Operations:

The output voltage of secondary winding S1 is ES1 and that of secondary winding S2 is ES2. In order to convert the output voltage from S1 and S2 into a single voltage signal, the two secondary S1 and S2 are connected in series are shown in figure 2.20. Thus the output voltage of the transducer is the difference of the two voltages.

Differential output voltage

$E_o = E_{S1} – E_{S2}$

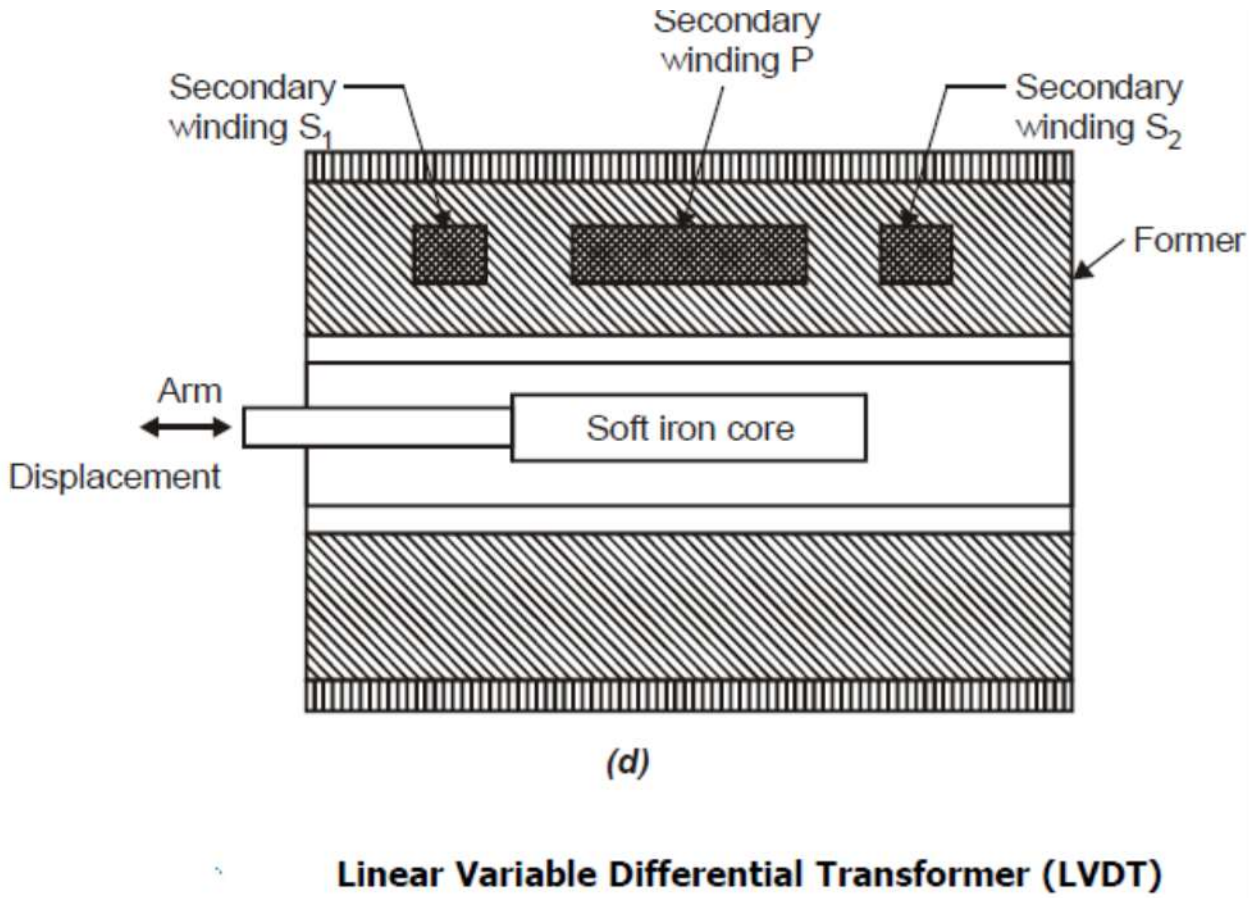

Linear Variable Differential Transformer (LVDT)

Case1:

When the core is at its normal (NULL) position, the flux linking with both the secondary windings are equal and hence equal emfs are induced in them. Thus at null position ES1 = ES2. Since the output voltage of the transducer is the difference of the two voltages, the output voltage Eo is zero at null position.

Case2:

Now if the core moved to the left of the null position, more flux links withwinding S1 and less with winding S2.Hence output voltage ES2 of the secondary winding S1 andmore than ES2. The magnitude of output votage is Eo = ES1 – ES2 and the output voltage is in phase with the primary voltage.

Case3:

Now if the core is moved to the right of the null position, the flux linking with winding S2 becomes larger than that linking with winding S1. This result in ES2 becoming larger than ES1. The output voltage in this case is Eo = ES2 – ES1and is 180° out of phase with the primary voltage.

In practice, output voltage is not zero

at null position, but some residual voltage exists at output terminals of LVDT but it is usually less than 1% of maximum value of output voltage in linear range as shown in figure.Other causes of residual voltage are stray magnetic fields and temperature effects.

However, with improved technological methods and with the use of better ac sources, the residual voltage can be reduced to almost a negligible value.

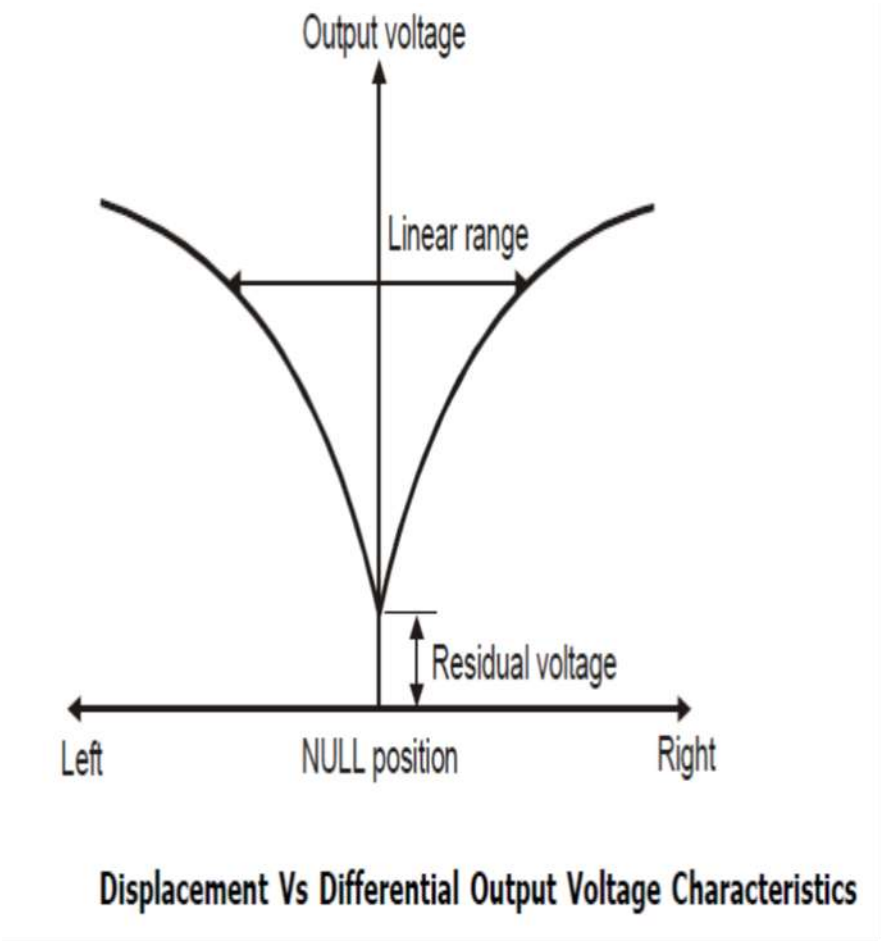

Displacement Vs Differential Output Voltage Characteristics

Advantages of LVDT:

High Range

Immunity from External Effects

High Input and High Sensitivity

Ruggedness

Low Hysteresis

Low Power Consumption

Disadvantage of LVDT

1. Large displacements are required for differential output.

2. They are sensitive to stray magnetic field.

3. Many a time, the transducer performance is affected by vibration.

4. The receiving instrument must be selected to operate on AC signals or a demodulator network must be used if a DC output is required.

5. The dynamic response is limited mechanically by the mass of the core and electrically by the frequency of applied voltage.

The frequency of the carrier should be at least ten times the highest frequency component to be measured.

6. Temperature affects the performance of the transducer.

Applications

LVDTs are used to measure

1.Displacement

2. Force,

3. Weight

4. Pressure,

5. Position.

ROTARY VARIABLE DIFFERENTIAL TRANSFORMER (RVDT)

RVDT is used to sense the angular displacement and it is similar to the LVDT except that its core is cam shaped and may be rotated between the windings by means of shaft are shown in figure.

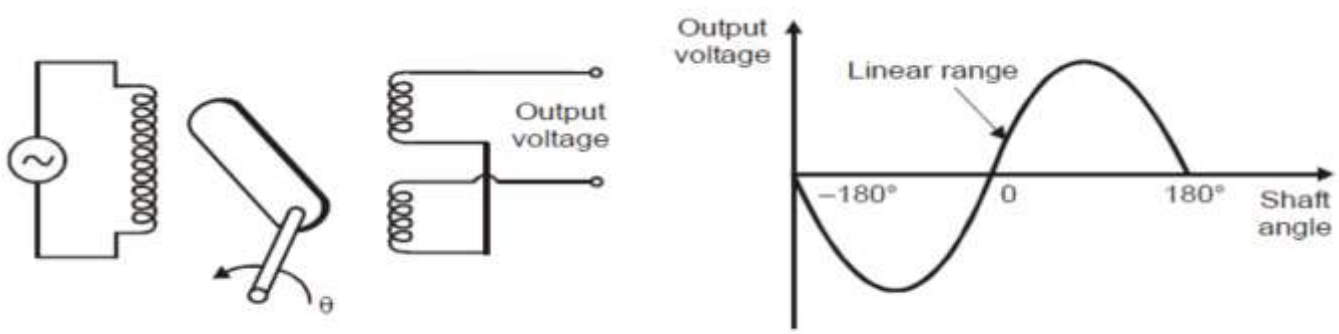

(a) Arrangement of RVDT *(b) Output voltage waveform of transducer*

Operations:

The operation of a RVDT is similar to that of LVDT. At the null position of the core, the output voltages of secondary winding S1 and S2 are equal and in opposition.

Therefore, the net output is zero. Any angular displacement from the null position will result in a differential voltage output. The greater this angular displacement, the greater will be the differential output. Hence the response of the transducer is linear.

Clockwise rotation produces an increasing voltage of a secondary winding of one phase while counterclock - wise rotation produces an increasing voltageof opposite phase.

Hence the amount of angular displacement and its direction may be ascertained from the magnitude and phase of the output voltage of the transducer.

SYNCHRO:

A synchro is an electromagnetic transducer which is commonly used to convert the angular position of a shaft into an electrical signal.

Although the name, 'synchro' is universally used in the instrumentation filed, trade names such as selsyns, microsysns and autosysn are used for these instruments.

Synchro consists of two major parts such as stator and rotor. The output emf voltage induced in the stator coil is due to variation in the angular motion of the rotor when it is excited with ac voltage.

Construction

Synchro is a single assembly comprising both stator and rotor. They are

made up of silicon or steel material of high grade.

In stator, three coils of identical type are arranged in a manner that their

axes are mutually at 120° apart. These three windings are uniformly distributed

in their slots provided by the stator.

The rotor is provided with a winding through which an ac excitation is

given. There are two popular types of rotor shapes such as dump bell shaped rotor and cylindrical shaped rotor. Figure 2.23 shows various shaped rotor types, and figure below shows the arrangement of stator assembly.

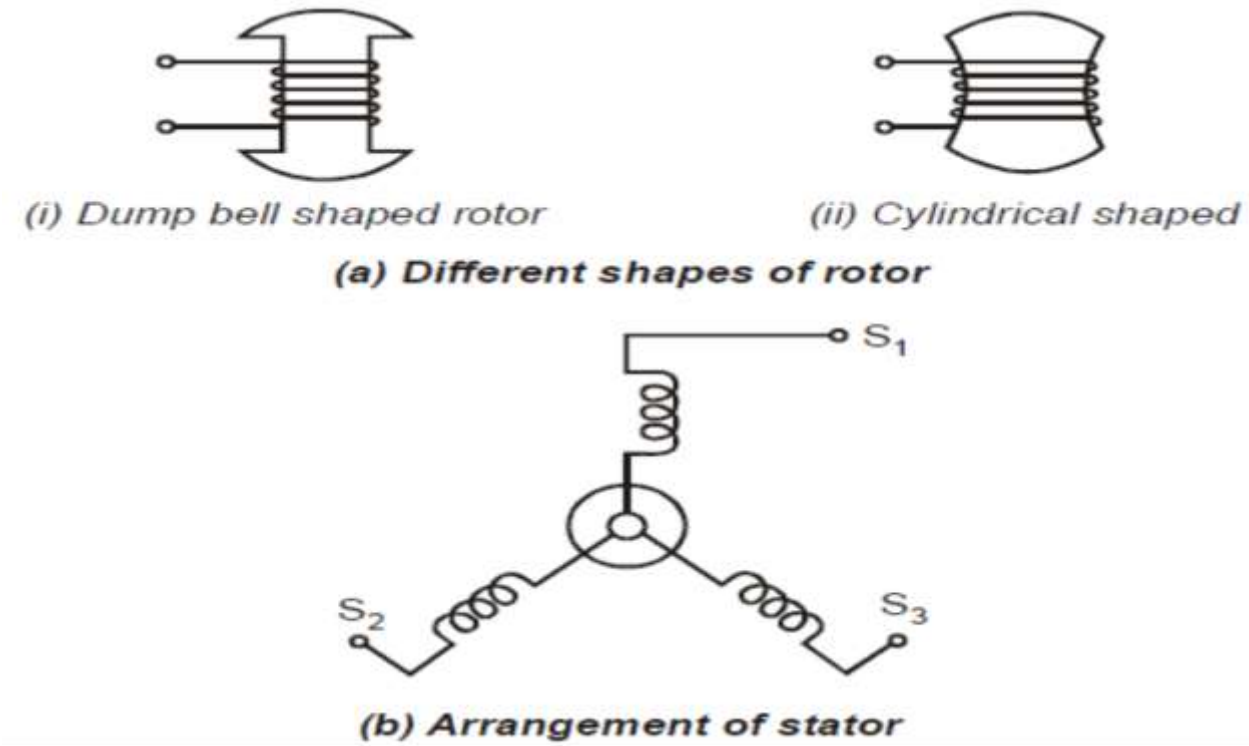

Working Principle:

There is a single winding in the rotor which is excited with an ac voltage.

Due to this, there will be flux generation in stator path.

Whenever there is an angular displacement in the rotor winding, there will be variation in the flux which will further induce emf in all the three windings in stator assembly.

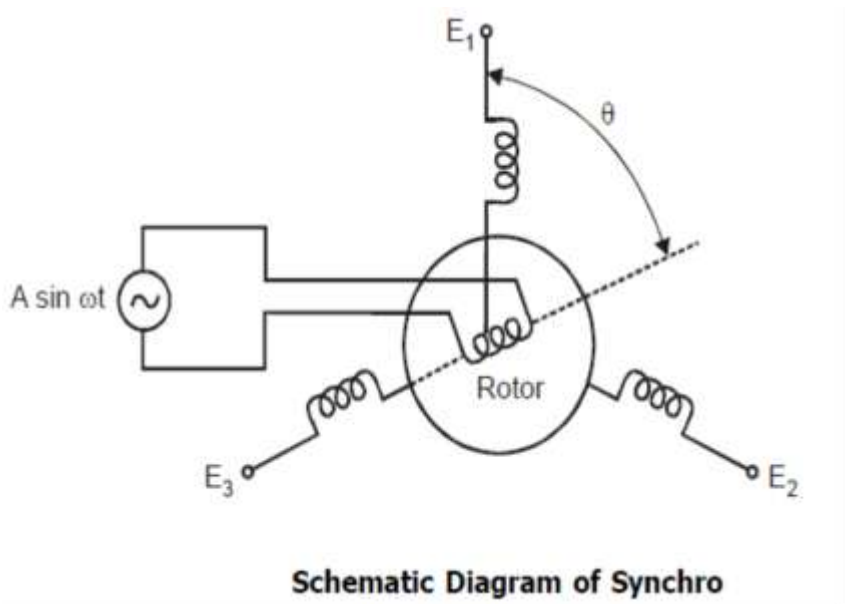

Expression of voltage for rotor and stator windings

Rotor voltage

$$E_r = A \sin \omega t$$

Stator voltage in S_1 winding

$$E_1 = E_m \sin \omega t \cos \theta$$

Stator voltage in S_2 winding

$$E_2 = E_m \sin \omega t \cos (120 - \theta)$$

Stator voltage in S_3 winding

$$E_3 = E_m \sin \omega t \cos (120 + \theta)$$

where, E_m is the peak voltage induced in the stator coil.

MICROSYN:

Microsyn is another name of the variable reluctance transducer.

There are two major parts such as a ferromagnetic rotor and a stator assembly.

In the stator, four coils a, b, c and d are connected together with that the voltage induced in coils a and c should be same as the voltages induced in coils b and d at NULL position of the ferromagnetic rotor.

Based on the rotation of the rotor in clockwise directions there will be increased reluctance in the coils a and c and decreased reluctance in the coils b and d which gives a net output voltage (Eo).

If the rotation in counter clockwise directions it produces same kind of effect in coils b and d with 180° phase shift.

With the help of microsyns, it is possible to detect very small motion which provides output signal for even 0.01° of changes in angles.

Microsyns have the sensitivity as high as five volt per degree rotations.

Variable Reluctance Transducer:

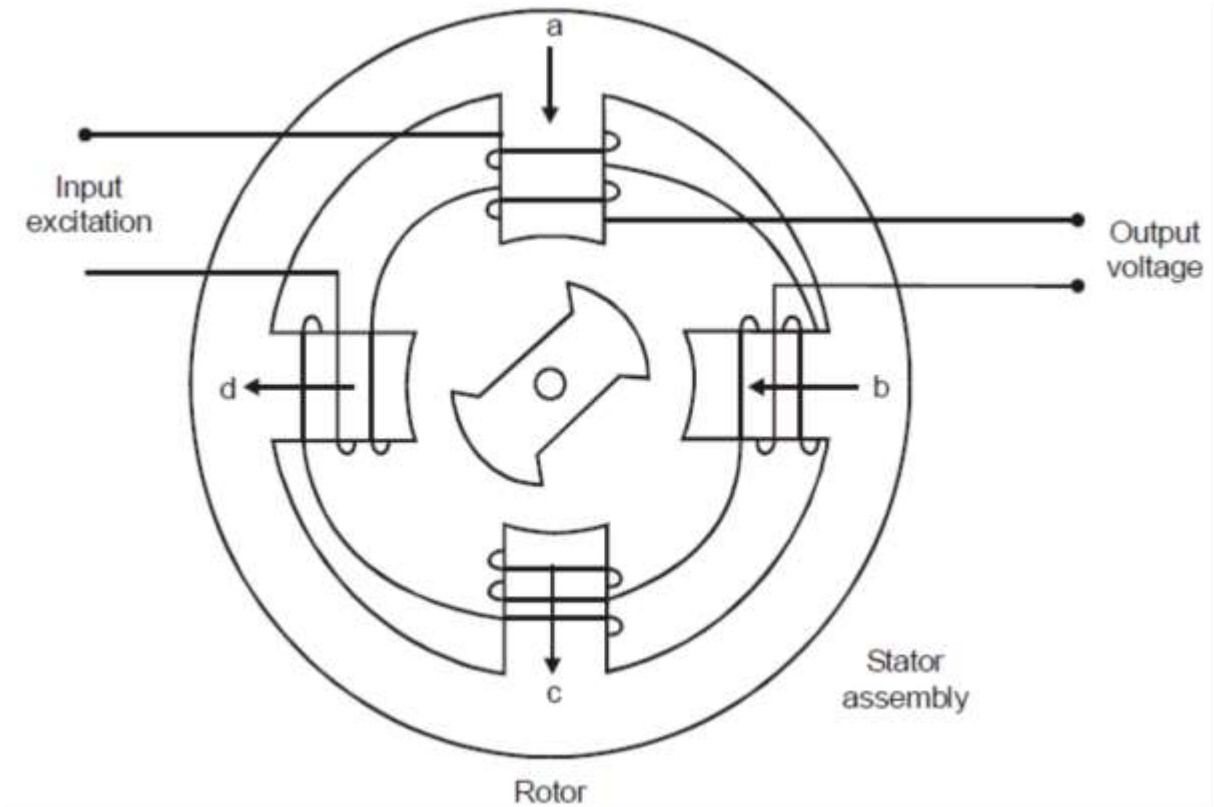

ACCELEROMETERS:

An accelerometer is an electromechanical device that measures acceleration forces.

These forces may be static, like the constant force of gravity pulling at our feet, or they could be dynamic - caused by moving or vibrating the accelerometer.

The accelerometers measure the inertia force generated when a mass is affected by change in velocity.

This force may change the tension of a string or cause a deflection of beam or may even change the vibrating frequency of a mass.

The Accelerometers are composed of three main elements: a mass, asuspension mechanism that positions the mass and a sensing element that returns a observation proportional to the acceleration of the mass.

Some devices include an additional servo loop that generates an opposite force to improve the linearity of the sensor.

Many of the accelerometers arc based on the pendulum principle. They are built with a proof mass, a spring hinge and a sensing device.

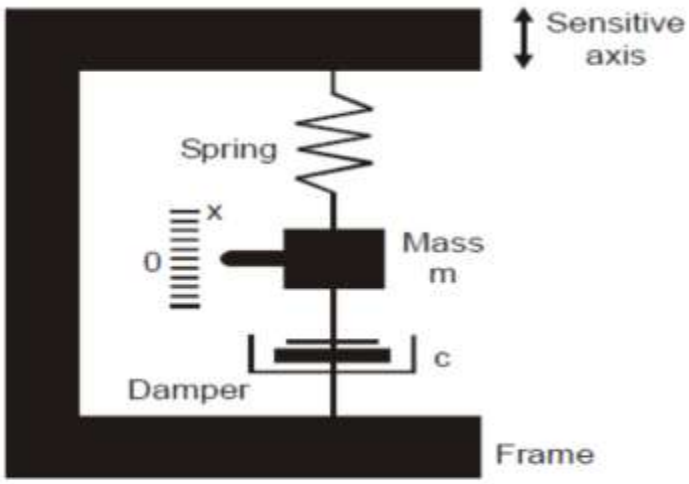

Basic components of a one degree of freedom accelerometer

GPS (GLOBAL POSITIONING SYSTEM):

The Global Positioning System (GPS) is a space-based navigations system that provides location and time information in all weather conditions, anywhere on or near the earth where there is an unobstructed line of sight to four or more GPS satellites.

GPS is "space based satellite navigation system" which can show the exact position on or near the Earth surface, anytime, anywhere, in any weather condition.

The GPS system provides critical capabilities to military, civil and commercial users around the world.

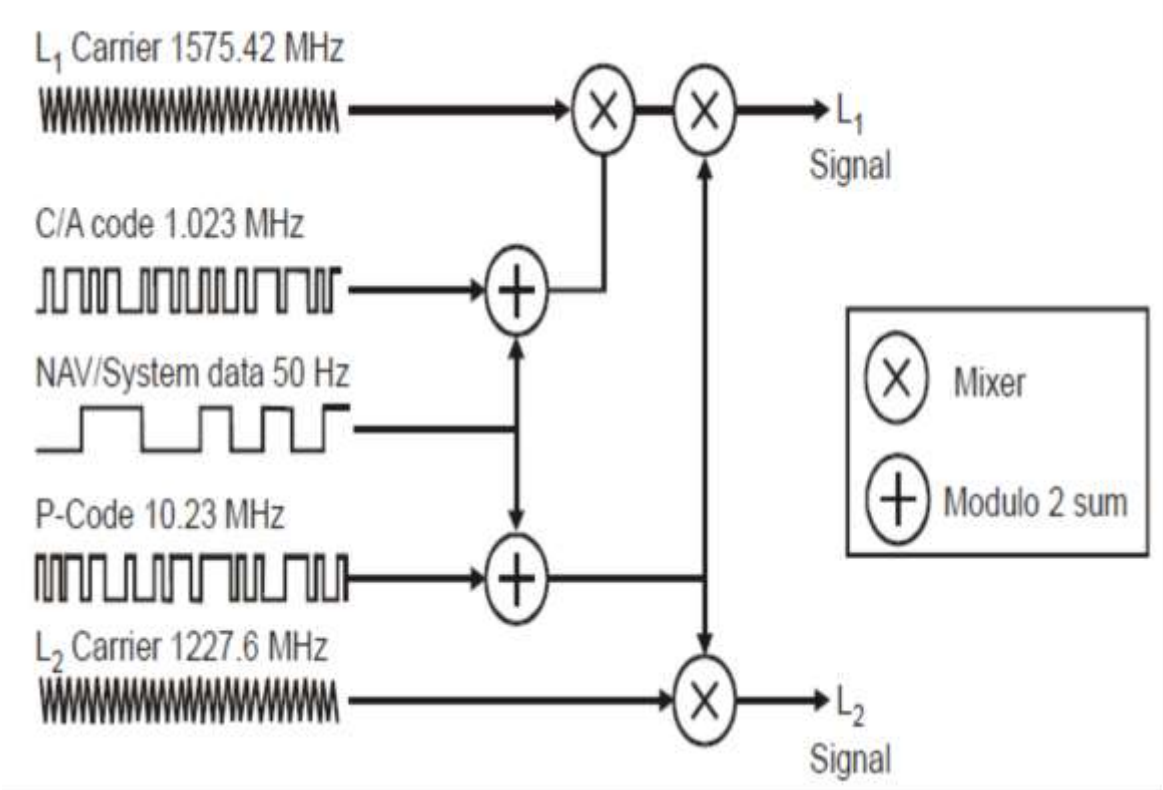

Advantages and Disadvantages:

The principle advantage of using GPS over land based beacons is that the GPS signal is readily available which reduces the deployment cost and time of the system.

Further, a GPS system is less susceptible to damage since the satellites, the beacons of the GPS, are maintained by international reputed organizations.

GPS is extremely effective for outdoor ground-based and flying robots.

A disadvantage of this technique is that the stationary receiver must be installed, its location must be measured very carefully, and of course the moving robot must be within kilometers of this static unit in order to benefit from the DGPS technique.

System Description

1. The Space Segment: Consists of satellites and transmitted signals.

Special Features of the Space Segment:

The Operational GPS Constellation consists of minimum 24 satellites, each in its own orbit, approximately about 20,200 km. above the Earth, in 12 hours (nearly 11hrs 58 min). There are often more than 24 operational satellites as new ones are launched to replace older satellites.

The satellite orbits repeat almost the same ground track (as the earth turns beneath them) once each day. The orbit altitude is such that the satellites repeat

the same track and configuration over any point approximately each 24 hours (4 minutes earlier each day).

2. The Control Segment:

Consists of ground stations (located around the world) that make sure the satellites are working properly.

Control Segments formerly consists of 5 tracking stations situated at Hawaii, Ascension Island, Diego Garcia, Kwajalein and the Master Control facility is located at Schriever Air force Base(Formerly Falcon AFB) in Colorado Springs.

Newly added control stations after 2005 are Washington DC England, Ecuador, Argentina, Bahrain and Australia.

These Monitor stations measure signals from the SVs, which are incorporated into orbital models for each satellites.

Master stations collect the data about the satellites of this system continuously from the other tracking stations.

MCS process the tracking data for computation of satellite ephemerides (or co- ordinate) and satellite clock parameters.

The Master control station uploads ephemeris and clock data to SVs.

3. The User Segment

Consists of receivers, which we can hold in our hand or mount in our car.

The GPS user segment consists of the GPS receivers and the user community. GPS receivers convert SV signals into position, velocity and time estimates.

Four satellites are required to compute the four dimensions of X, Y, Z (Position) and Time.

GPS receivers are used for navigation, positioning, time dissemination andother research.

Navigation in three dimensions is the primary function of GPS.

Navigation receivers are made for aircraft, ships, and ground vehicles and for hand carrying by individuals.

Precise positioning is possible using GPS receivers at reference locations providing corrections and relative positioning, geodetic control and plate tectonic studies are example.

GPS user segment

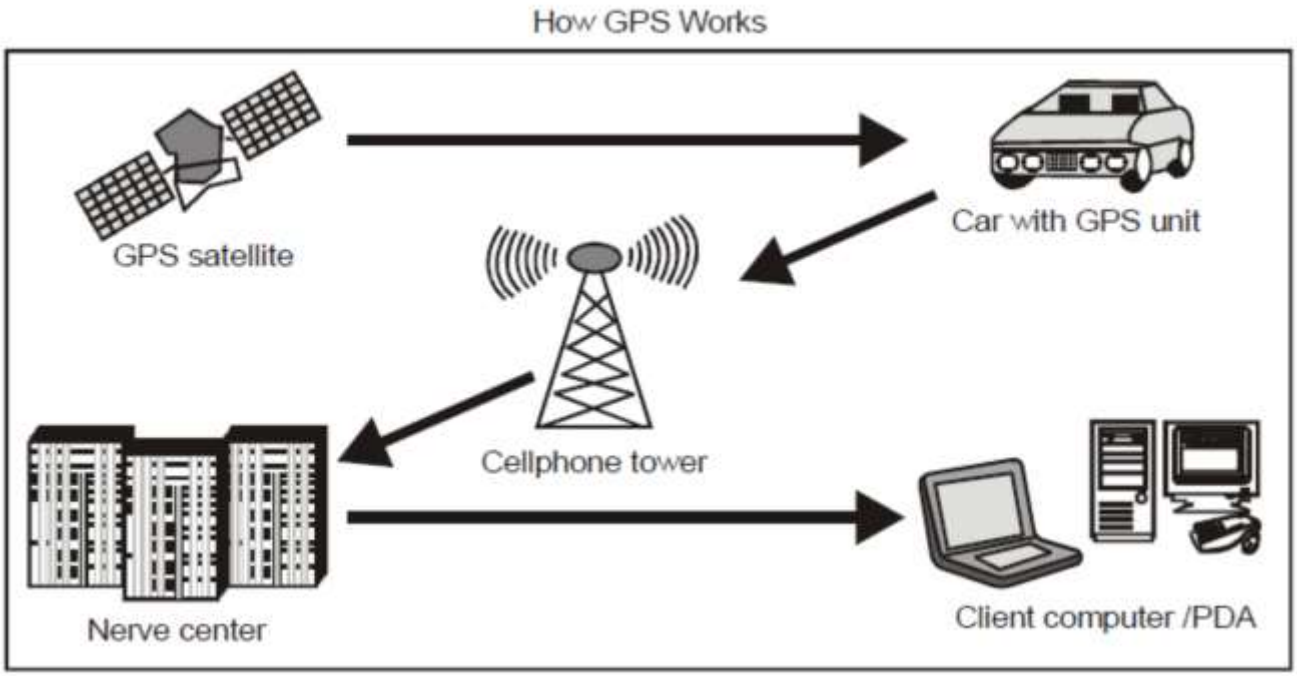

Applications of GPS:

1. Road Traffic Congestion

2. Tectonics

3. GPS and Terrorism

4. GPS of Mining

5. GPS and Tours

6. Navigation

7. Disaster Relief

8. GPS-Equi Radio Sondes and Dropsondes

9. Fleet Tracking

10. Cellular Telephony

11. Robotics

BLUETOOTH

Bluetooth is a standardized protocol for sending and receiving data via 2.4 GHz wireless link.

It's a secure protocol and it's perfect for short-range, lowpower, low-cost, wireless transmissions between electronic devices.

Working of Bluetooth

The Bluetooth protocol operates at 2.4 GHz in the same unlicensed ISM frequency band where RF protocols like ZigBee and WiFi also exist.

There is a standardized set of rules and specifications that differentiates it from other protocols.

If you have a few hours to kill and want to learn every nook and cranny of Bluetooth, check out the published specifications, otherwise here's a quick overview of what makes Bluetooth special.

BWT-enabled devices operate in the unrestricted 2.4-gigahertz (GHz) Industrial, Science, Medical (ISM) band. The ISM band ranges between 2.400

GHz and 2.483 GHz. BWT-enabled devices use seventy-nine 1-megahertz frequencies (from 2.402 to 2.480 GHz) in the ISM band.

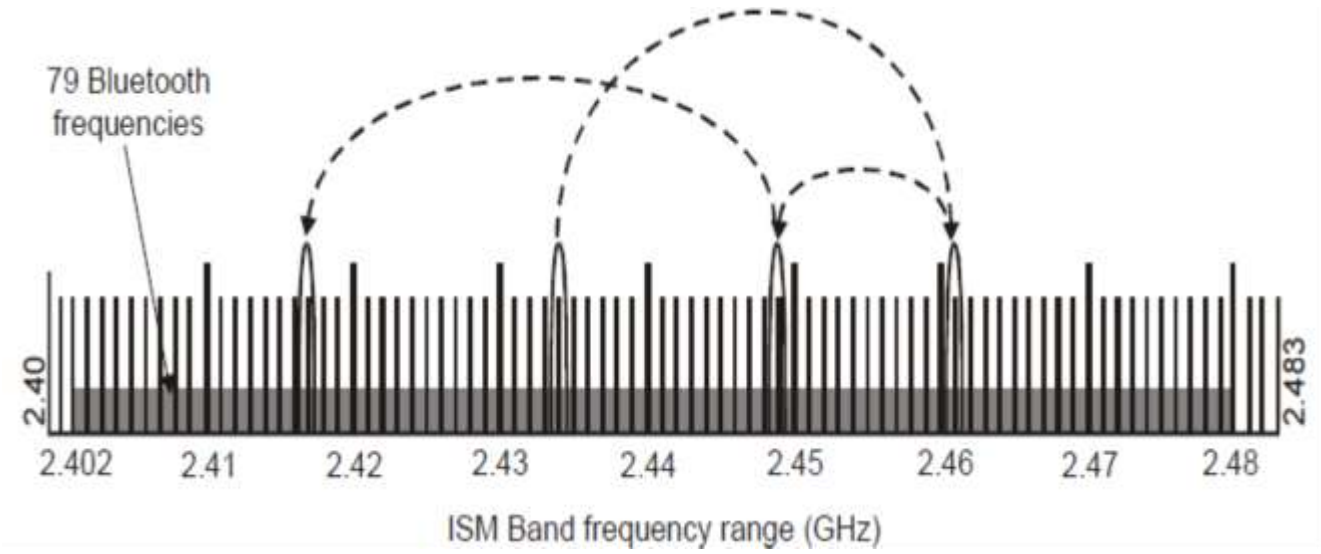

Connection Process:

1. Inquiry

If two Bluetooth devices know absolutely nothing about each other, one must run an inquiry to try to discover the other. One device sends out the inquiry request, and any device listening for such a request will respond with its address, and possibly its name and other information.

2. Paging (Connecting)

Paging is the process of forming a connection between two Bluetooth devices. Before this connection can be initiated, each device needs to know the address of the other (found in the inquiry process).

3.Connection

After a device has completed the paging process, it enters the connection state. While connected, a device can either be actively participating or it can be put into a low power sleep mode.

Active Mode: This is the regular connected mode, where the device is actively transmitting or receiving data.

Sniff Mode: This is a power-saving mode, where the device is less active. It'll sleep and only listen for transmissions at a set interval (e.g. every 100 ms).

Hold Mode: Hold mode is a temporary, power-saving mode where a device sleeps for a defined period and then returns back to active mode when that interval has passed. The master can command a slave device to hold.

Park Mode: Park is the deepest of sleep modes. A master can command a slave to "park", and that slave will become inactive until the master tells it to wake back up.

4.Bonding and Pairing

When two Bluetooth devices share a special affinity for each other, they can be bonded together. Bonded devices automatically establish a connection whenever they're close enough.

5. Power Classes

The transmit power, and therefore range, of a Bluetooth module is defined by its power class. There are three defined classes of power: Some modules are only able to operate in one power class, while others can vary their transmit power.

6. Bluetooth Profiles

Bluetooth standard to more clearly define what kind of data a Bluetooth module is transmitting. While Bluetooth specifications define how the technology works, profiles define how it's used.

RANGE SENSORS

Commonly used range sensors in robotics:

1.Tactile and Proximity sensors

2. Ultrasonic Sensors

3. IR Range Sensors

4. Laser Range Finders

5.Vision Systems

Each varies in complexity, size, weight, expense, accuracy, etc..

The detection range is defined as the maximum distance that the sensor can read reliably from.

RF BEACON (RADIO FREQUENCY BEACON- 1M TO 100 M)

A radio beacon is a transmitter at a known location, which transmits a continuous or periodic radio signal with limited information content on a specified radio frequency.

Occasionally the beacon function is combined with some other transmission, like telemetry data or meteorological information.

The Millibot local ization system i s based on trilateration, i.e., determination of the position based on distance measurements to known landmarks or beacons.

GPS is an example of a trilateration system; the position of a GPS unit on earth is calculated from distancemeasurements to satellites in space.

Similarly, the Millibotlocalization system determines the position of each robotbased on distance measurements to stationary robots withknown positions.

The localization system uses ultrasound pulses tomeasure the distances between robots.

Periodically, eachbeacon simultaneously emits a radio frequency(RF) pulseand an ultrasonic pulse.

Radio Frequency Beacon

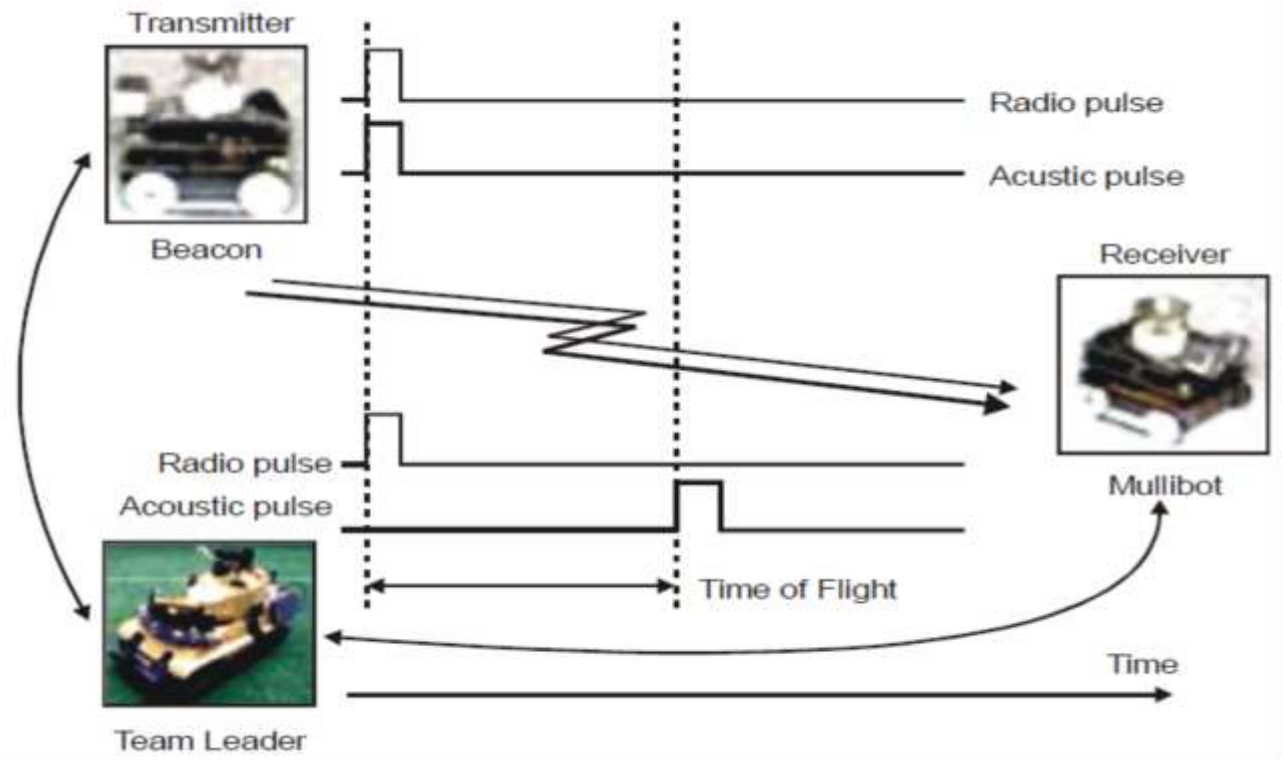

Applications of Radio beacons

1. Air and sea navigation,

2. Propagation research,

3. Robotic mapping,

4. Radio-frequency identification (RFID) / Near Field Communication

(NFC) and

5. Indoor guidance, as with real-time locating systems (RTLS) like Syledis

or simultaneous localization and mapping (SLAM).

REFLECTIVE BEACONS

Beacon based Localization

Beacon navigation systems are the most common navigation aids on ships and aircrafts as well as on commercial mobile robot systems. Active beacons can be detected reliably and provide accurate positioning information with minimal processing.

As a result, this approach allows high sampling rates and yields high reliability, but it does also incur high cost in installation and maintenance. Most of the beacon based localization systems rely on a set of beacons placed at known positions in the environment. The mobile robot vehicle is equipped with a sensor(s) that can observe the beacons and the navigational system uses these

observations and knowledge of the beacon positions to locate the robot vehicle.

1.Estimation Process

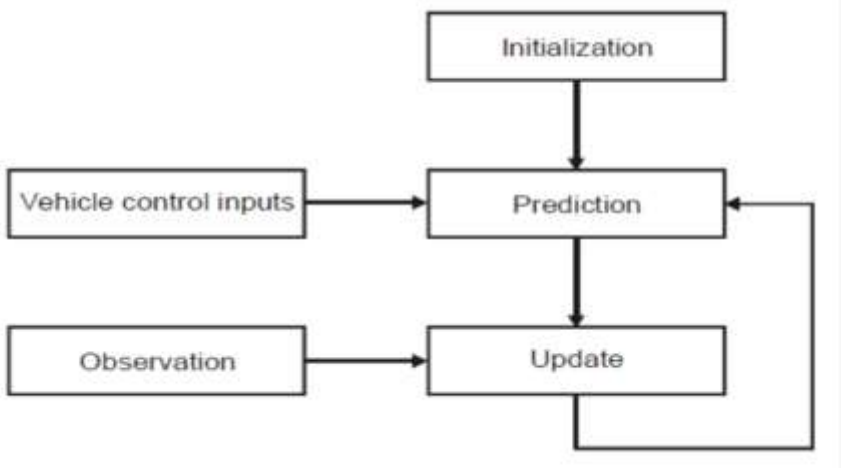

2. Trilateration

Trilateration is a method to determine the position of an object based on simultaneous range measurements from three stations located at known sites.

In trilateration navigation systems, there are usually three or more transmitters mounted at known locations in the environment and one receiver on board the robot.

3.Triangulation

It is the most widespread method used to localize a mobile robot vehicle.

In this configuration there are three or more active transmitters mounted at known locations

ULTRASONIC SENSORS

The sensor sends a sonic pulse signal, which is reflected by the object to be detected.

The time, which the pulse signal requires from the sensor to the object and back, is measured and evaluated.

The distance is calculated from the time and the pulse speed.

Ultrasonic sensors are suitable for use in difficult industrial environments.

Disturbances such as dust, soiling or fog do not influence measurements.

Mutually interfering light influences or temperature fluctuations are not a problem either.

Classification of Ultrasonic Sensors:

1. Short-Range Distance Sensors

(Displacement) Precision in the millimetre range

2. Mid-Range Distance Sensors

The solution for measuring ranges from 13 mm to 24 m

3. Long-Range Distance Sensors

Developed for maximum ranges from 200 mm to 1,200 m

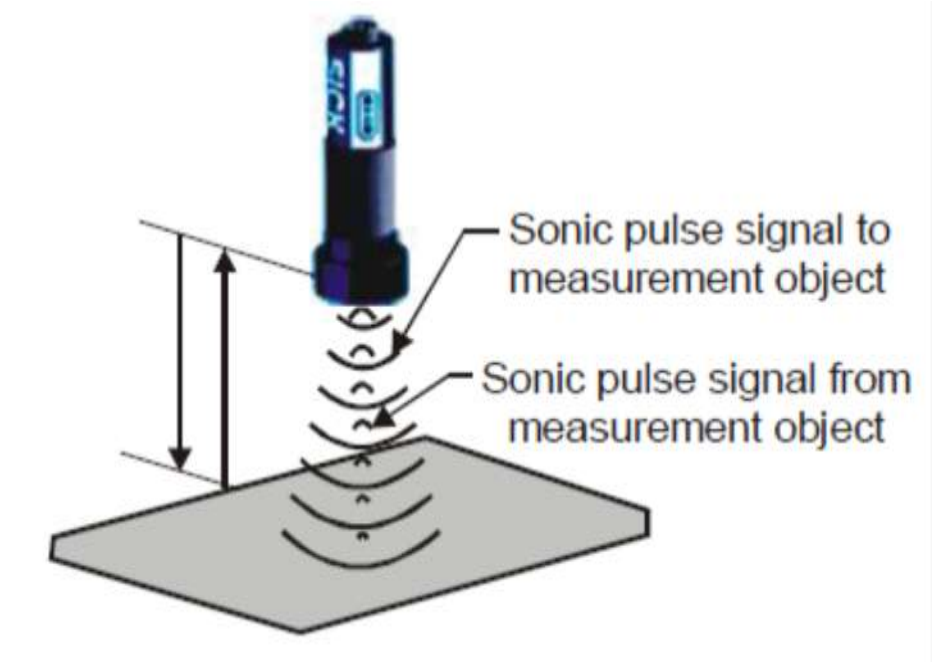

Advantages & Disadvantages of ultrasonic range sensors
Advantages of ultrasonic range sensors

1. Reliable with good precision

2. Not as prone to outside interference

3. Good maximum range

4. Inexpensive

Disadvantages

1. Sensitive to smoothness & angle to obstacles

2. Poor resolution

3. Prone to self-interference from echos

4. Cannot detect obstacles too close

LIGHT DETECTION AND RANGING (LIDAR)

Laser Range Finders are perhaps the most accurate sensors for measuring distances.

Light distance and ranging (LIDAR) systems use the time taken by the light to fly back and forth to an object in an effort to measure the distance to this target.

Building a LIDAR system can be made with either a high-speed analog to-digital converter (ADC) or a time-to-digital converter (TDC).

Lidar systems use one of three techniques:

a) Pulsed Modulation

b) Amplitude Modulation Continuous Wave (AMCW)

c) Frequency Modulation Continuous Wave (FMCW)

Components of a LiDAR system

Laser scanner

High-precision clock

GPS

IMU - Inertial navigation measurement unit

Data storage and management systems

GPS ground station

Electromagnetic Spectrum

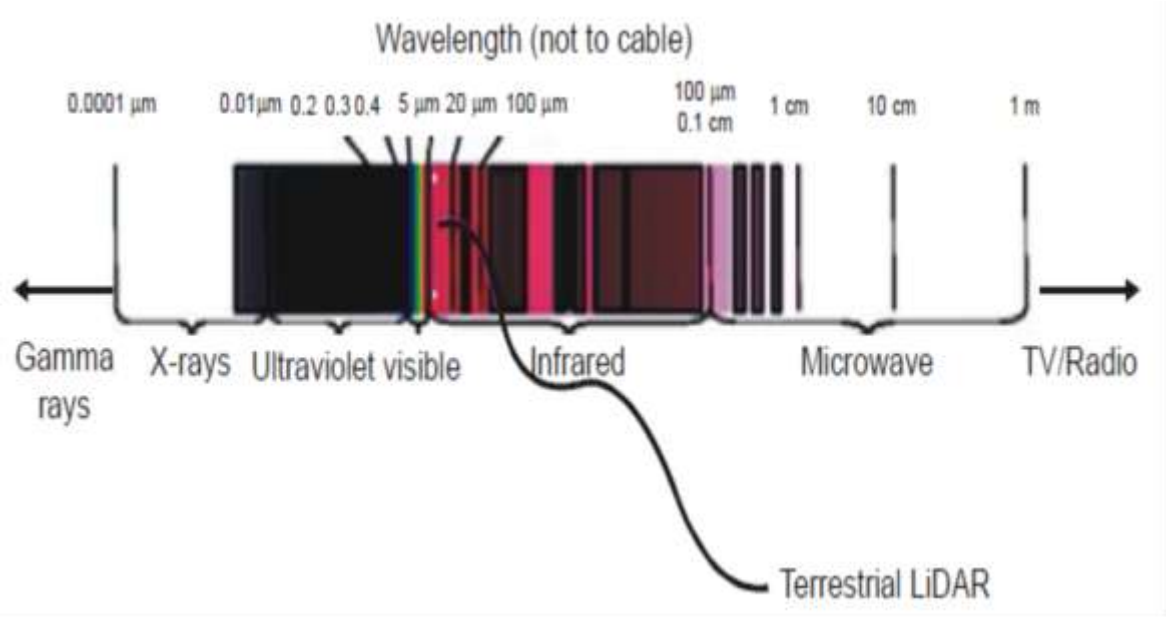

Working of Laser

High-voltage electricity causes a quartz flash tube to emit an intense burst of light, exciting some of the atoms in a cylindrical ruby crystal to higher energy levels.

At a specific energy level, some atoms emit particles of light called photons.

At first the photons are emitted in all directions. Photons from one atom stimulate emission of photons from other atoms and the light intensity is rapidly amplified.

Applications

1. Factory Automation Optical Proximity Sensor

2. Factory Automation Optical Level Sensor

3. Factory Automation Volume Scanners

4. Drones

UNIT-III

FORCE, MAGNETIC AND HEADING SENSORS

Strain gauge-Load Cell-Magnetic Sensors - types, principle, requirement and advantages Magneto resistive sensors-Hall effect sensors-Current sensor -Heading Sensors - Compass, Gyroscope, Inclinometers

Piezoresistive Effect

If a metal conductor is stretched or compressed, its resistance changes on account of the fact that both length and diameter of conductor change. Also there is a change in the value of resistivity of the conductor when it is strained and this property is called piezoresistive effect.

Therefore, resistance strain gauges are also known as piezoresistive gauges.

Uses:

1. Used for measurement of strain and associated stress in experimental stress analysis.

2. Many detectors and transducers notably the load cells, torque meters, diaphragm types pressure gauges, temperature sensors, accelerometers and flow meters, employ strain gauges as secondary transducers.

Theory of Strain Gauges

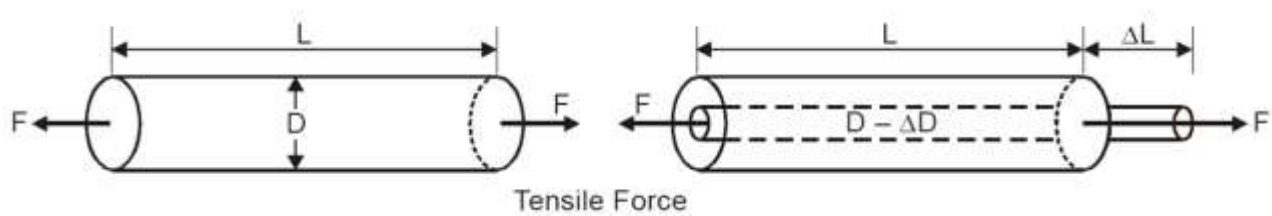

Figure 3.1: Change in Dimensions of a Strain Gauge Element when Subjected to a Tensile Force

The change in the value of resistance by straining the gauge may be partly explained by the normal dimensional behaviour of elastic material.

If a strip of elastic material is subjected to tension.

Since the resistance of the gauge a conductor is proportional to is length and inversely proportional to its area of cross section, the resistance of the gauge increases with positive strain.

The change in the value resistance of strained conductor is more than what can be accounted for an increase in resistance due to dimensional changes. The extra change in the value of resistance is conductor when strained.

This property is known is piezoresistive effect

Let us consider a strain gauge made of circular wise. The wire has two dimensions; Length = L, area = A, Diameter = D before being strained. The material of the wire has resistivity ρ.

$$\therefore \quad \text{Resistance of unstrained gauge, } R = \frac{\rho L}{A}$$

Let a tensile stress S be applied to the wire. This produces a positive strain

Let ΔL = Change in length

ΔA = Change in area

ΔD = Change in diameter and

ΔR = Change in resistance

In order to find how ΔR depends upon the material physical quantities, the expression for R is differentiated with respect to stress S.

$$\frac{dR}{dS} = \frac{\rho}{A}\frac{\partial L}{\partial S} - \frac{\rho L}{A^2}\frac{\partial L}{\partial S} + \frac{L}{A}\frac{\partial \rho}{\partial S} \qquad \text{... (3.1)}$$

Dividing equaiton 1 throughout resistance $R = \frac{\rho L}{A}$, we have

$$\frac{1}{R}\frac{dR}{dS} = \frac{1}{L}\frac{\partial L}{\partial S} - \frac{1}{A}\frac{\partial A}{\partial S} + \frac{1}{\rho}\frac{\partial \rho}{\partial S} \qquad \text{... (3.2)}$$

It is evident from equation 2, that the per unit change in resistance is due to

1. Per unit change in length $= \frac{\Delta L}{L}$

2. Per unit change in area $= \frac{\Delta A}{A}$ and

3. Per unit change in resistivity $= \frac{\Delta \rho}{\rho}$

$$\text{Area, } A = \frac{\pi}{4}D^2 \qquad \therefore \frac{\partial A}{\partial S} = 2\frac{\pi}{4}D\frac{\partial D}{\partial S} \qquad \text{... (3.3)}$$

$$\frac{1}{A}\frac{dA}{dS} = \frac{\left(2\,\pi/4\right)D}{\left(\pi/4\right)D^2} \qquad \frac{\partial D}{\partial S} = \frac{2}{D}\frac{\partial D}{\partial S} \qquad \text{... (3.4)}$$

$\therefore$ Equation 3.3 can be written as

$$\frac{1}{R}\frac{dR}{dS} = \frac{1}{L}\frac{\partial L}{\partial S} - \frac{2}{D}\frac{\partial D}{\partial S} + \frac{1}{\rho}\frac{\partial \rho}{\partial S} \qquad \text{... (3.5)}$$

Poisson's ratio

$$\nu = \frac{\text{lateral strain}}{\text{Longitudinal strain}} = \frac{-\,\partial D / D}{\partial L / L} \qquad \text{... (3.6)}$$

$$\frac{\partial D}{D} = -\,\nu \times \frac{\partial L}{L}$$

$$\frac{1}{R}\frac{dR}{dS} = \frac{1}{L}\frac{\partial L}{\partial S} + \nu\frac{2}{L}\frac{\partial L}{\partial S} + \frac{1}{\rho}\frac{\partial \rho}{\partial S} \qquad \text{... (3.7)}$$

For small variations, the above relationship can be written as

$$\frac{\Delta R}{R} = \frac{\Delta L}{L} + 2\,\nu\,\frac{\Delta L}{L} + \frac{\Delta \rho}{\rho} \qquad \text{... (3.8)}$$

The gauge factor is defined as the ratio of per unit change in resistance to per unit change in length

$$\text{Gauge factor,} \quad G_f = \frac{\frac{\Delta R}{R}}{\frac{\Delta L}{L}} \qquad \text{... (3.9)}$$

$$\frac{\Delta R}{R} = G_f\,\frac{\Delta L}{L} = Gf \times \varepsilon \qquad \text{... (3.10)}$$

where ε = strain $= \dfrac{\Delta L}{L}$

The gauge factor can be written as

$$= 1 + 2\,\nu + \frac{\Delta \rho / \rho}{\varepsilon} \qquad \text{... (3.11)}$$

$$= 1 \qquad + 2\nu \qquad + \frac{\Delta \rho / \rho}{\varepsilon}$$

Resistance change due to change of length	Resistance change due to change in area	Resistance change due to piezo - resistive effect

$$G_f = \frac{\Delta R / R}{\Delta L / L} = 1 + 2\,\nu + \frac{\Delta \rho / \rho}{\Delta L / L}$$

Types of Strain Gauges:

1. Unbonded metal strain gauges
2. Bonded metal wire strain gauges
3. Bonded metal foil strain gauges
4. Vacuum deposited thin metal film strain gauges
5. Sputter deposited thin metal strain gauges
6. Bonded semiconductor strain gauges
7. Diffused metal strain gauges

Applications of Strain gauges

Experimental stress analysis of machines and structures.

Construction of force, torque, pressure, flow and acceleration transducers.

1.Unbonded Metal Strain Gauges

This gauge consists of a wire stretched between two points in an insulating medium such as air.

The wires may be made of various copper nickel, chrome nickel or nickel iron alloys.

They are about 0.003 mm in diameter, have a gauge factor of 2 to 4 and sustain of force of 2mN.

The length of wire is 25mm or less.

The flexure element is connected via a rod is diaphragm which is used for sensing of pressure.

The wires are tensioned to avoid buckling when they experience a compressive force.

Set up of a Unbonded Strain Gauge and Measurement with a Wheatstone Bridge

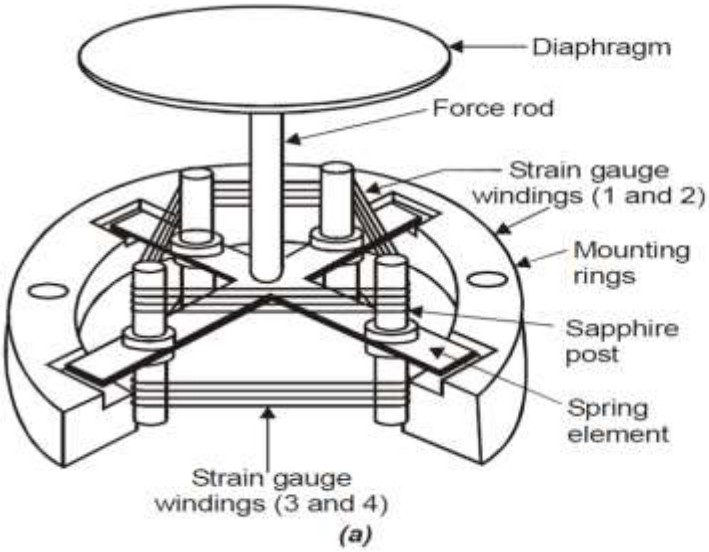

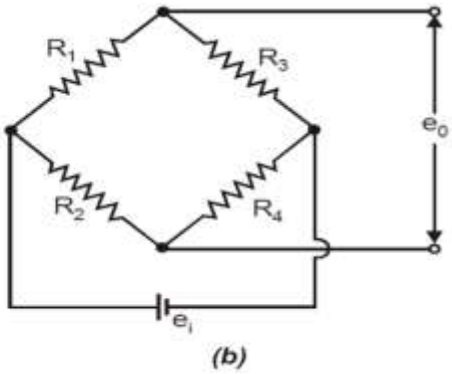

The unbounded metal wire gauges, used almost exclusively in transducer applications emply preloaded resistance wires connected in a wheatstone bridge.

At initial preload, the strains and resistances of the four arms are nominally equal with the result the output voltage of the bridge, e_0 .

Application of pressure produces a small displacement which is about 0.004 mm (full scale), the displacement increases tension in two wires and decreases it in the other two, thereby decreasing the resistance of the remaining two wires. This causes an unbalance of the bridge producing an output voltage which is proportional to the input displacement and hence to the applied pressures.

Electric resistance of each arm is 12W to 1000W, the input voltage to the bridge is 5 to 10 V and the full scale output of the bridge is typically about 20 mV to 50 mV.

2.Bonded Metal Wire Strain Gauges

A resistance wire strain gauge consists of a grid of fine resistance wire of about 0.025 mm in diameter or less. The frid is cemented to carrier which may be a thin sheet of paper, a thin sheet of bakelite or a sheet of teflon.

The wire is covered on top with a thin sheet of material so as to prevent it from any mechanical damage. The spreading of wire permits a uniform distribution of stress over the grid.

The carrier is bonded with an adhesive material to the specimen under study. This permits a good transfer of strain from carrier to grid of wires.

The wires cannot buckle as they are embedded in a matrix of cement and hence faithfully both the tensile and compressive strains of the specimen.

Since, the materials and the wire sizes used for bonded wire strain gauges are the same as used for unbonded wire strain gauges, the gauge factors and resistances, for both are comparable. the most commonly used forms of strain gauges.

Resistance Wire Strain Gauge

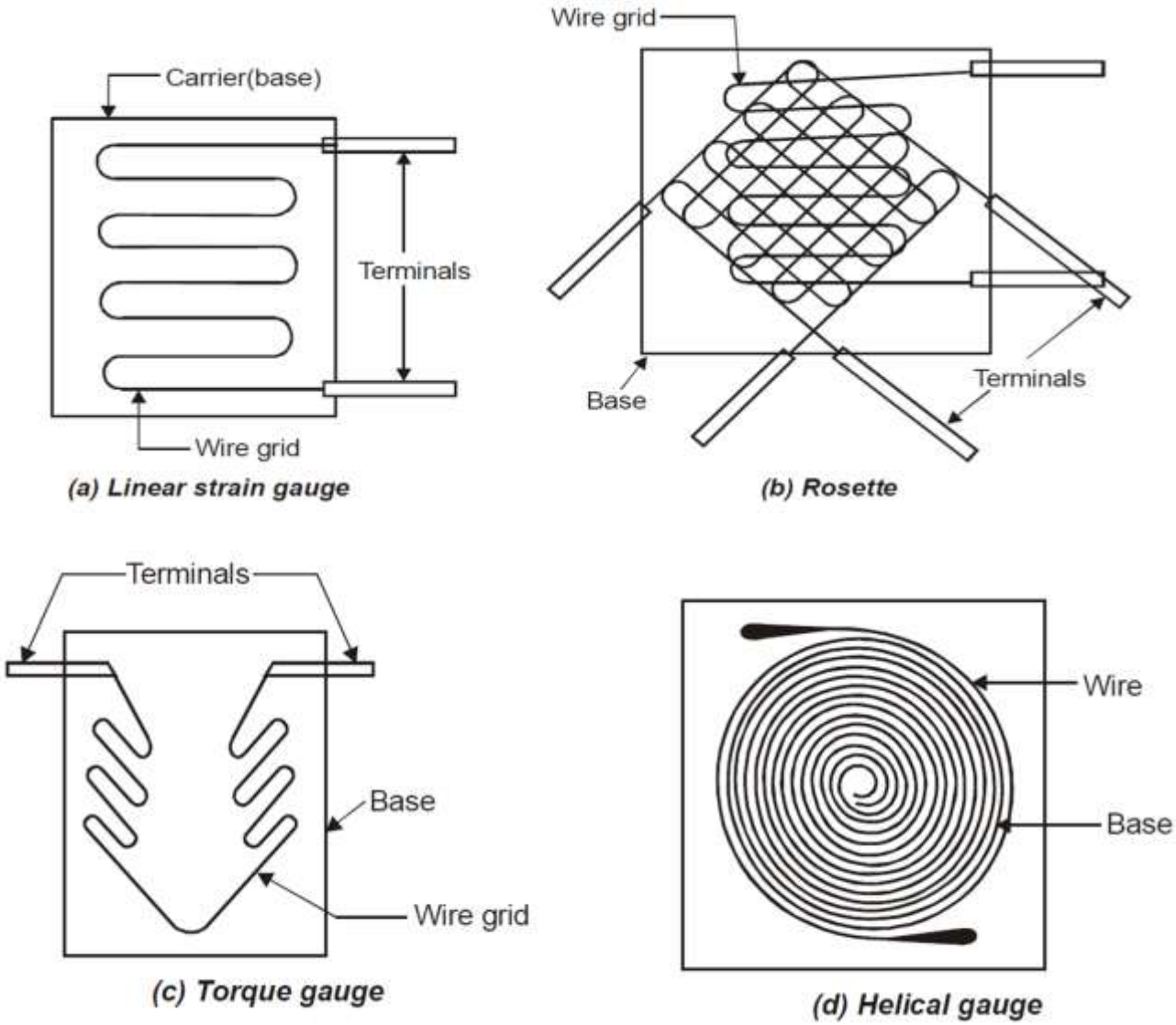

4.Bonded Metal Foil Strain Gauges:

This class of strain gauges is only an extension of the bonded metal wire strain gauges.

The bonded metal wire strain gauges have been completely superseded by bonded metal foil strain gauges.

Metal foil strain gauges and are used today for most general purpose stress analysis application and for many transducers.

Foil type gauges have much greater heat dissipation capacity as compared with wire wound strain gauges on account of their greater surface area for the same volume.

They can be used for higher operating temperature range.

Also the large surface area lead to better bonding.

The sensing elements of foil gauges are formed from sheets less than 0.005 mm thick by photo - etching processes, which allow greater flexibility with regard to shape.

For example, the three linear grid gauges are designed with fat ends turns.

This local increase in area reduces the transverse sensitivity which is a spurious input since the gauge is designed to measure the strain component along the length of grid elements.

To calculate what effect an applied stress has on a metal strain gauge.

Hooke's law gives a relationship between stress and strain for linear stress -strain curve in terms of modulus of elasticity of the material under stress.

Hooke's law as

Strain =S/E

where G, S and E are respectively the strain, stress and modulus of elasticity.

Units for stress and modulus of elasticity are N/m2.

The change in the value of resistance is quite small.

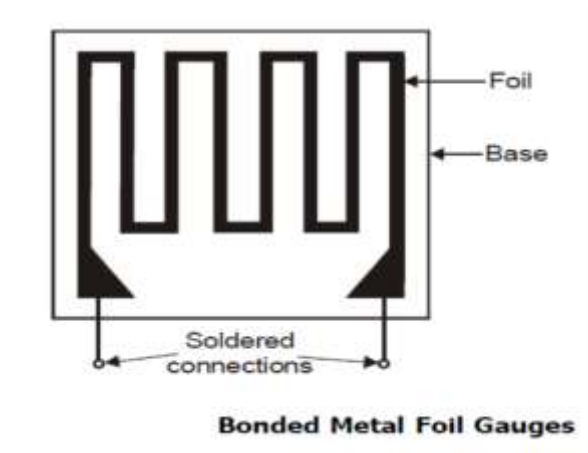

Bonded Metal Foil Gauges

5.Evaporation Deposited Thin Metal Strain Gauges:

Evaporation deposited thin film metal strain gauges are mostly used for the fabrication of transducers. They are of sputter deposited variety.

Both processes begin with a suitable elastic metal element. The elastic metal element converts the physical quantity into a strain.

Example of a pressure transducer, a thin, circular metal diaphragm is formed.

Both the evaporation and sputtering processes from all the strain gauge elements directly on the strain surface, they are not separately attached as in the case of bonded strain gauges.

In the evaporation process, the diaphragm is placed in a vacuum chamber with some insulating material.

Heat is applied until insulating material vapourises and then condenses, forming a thin dielectric film on the diaphragm.

Suitably shaped templates are placed over the diaphragm and the evaporation and condensation processes are repeated with the metallic gauge material forming the desired strain gauge pattern on top of the insulating substrate.

In the sputtering process, a thin dielectric layer is deposited in vacuum over the entire diaphragm surface.

The detailed mechanism of deposition is, however, entirely different from the evaporation method.

The complete layer of metallic gauge is sputtered on the tope of the dielectric material without using any substrate.

The diaphragms are now removed from the vacuum chamber and micro-imaging techniques using photo masking materials are used to form the gauge pattern.

The diaphragms are then returned to the vacuum chamber.

Sputter etching techniques are used to remove all unmasked metal layer, leaving behind the desired gauge pattern.

6.Semiconductor Strain Gauges

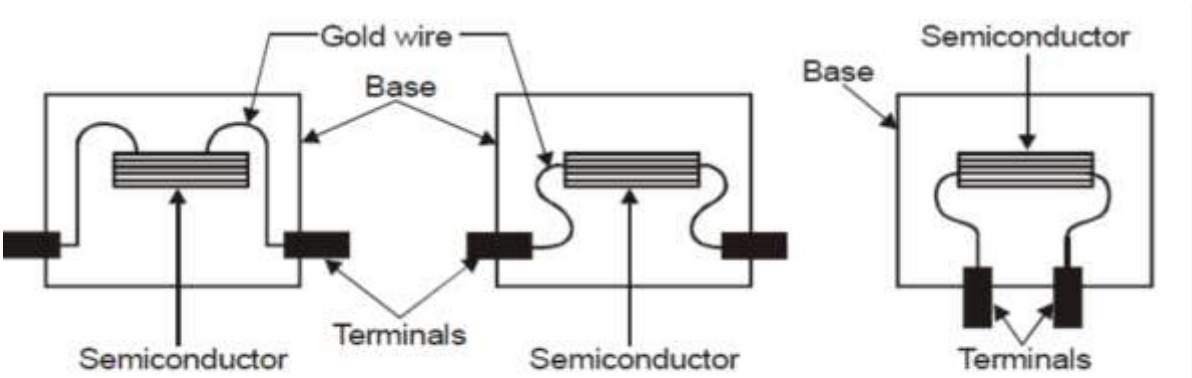

Semi - Conductor Strain Gauge

To have a high sensitivity, a high value of gauge factor is desirable.

A high gauge factor means a relatively higher change in resistance which can be easily

measured with a good degree of accuracy.

Semiconductor strain gauges are used where a very high gauge factor and a small envelope are required.

The resistance of the semi - conductors changes with change in applied strain.

Unlike in the case of metallic gauges where the change in resistance is mainly due to change in dimensions when strained, the semi - conductor strain gauges depend for their action upon piezo-resistive effect.

i.e., the change in the value of the resistance due to change in resistivity.

Semi - conducting materials such as silicon and germanium are used as resistive

materials for semiconductor strain gauges.

A typical strain gauge consists of strain sensitive crystal material and leads that are overlapped in a protective matrix.

The production of these gauges employs conventional semi – conductor technology using semi - conducting wafers or filaments which have a thickness of 0.5mm.

Gold leads are generally employed for making the contacts. Some of the typical semi conductor strain gauges are shown in figure 3.6. These strain gauges can be fabricated along with integrated circuit (IC) operational amplifier which can act as pressure sensitive transducers.

7.Diffused Strain Gauges

The diffused strain gauges are primarily used in transducers. the diffusion process used in IC manufacture is employed.

In pressure transducers, for example, the diaphragm would be of silicon rather than metal and the strain gauge effect would be realized by depositing impurities in the diaphragm to form an intrinsic strain gauge.

This type of construction may allow lower manufacturing costs in some designs as a large number of diaphragms can be made on a single silicon wafer.

LOAD CELL

Load cells utilize an elastic member as the primary transducer and strain gauges as secondary transducers.

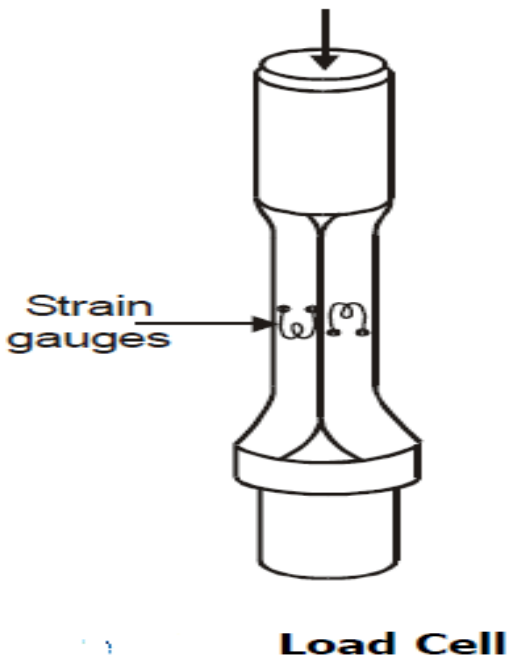

MAGNETIC SENSORS

Magnetization serves a strong impact in changing the properties of certain materials.

Magnetization changes or produce effects which are mechanical or electrical in nature and which are measurable.

Also, optical energy may produce changes in magnetization characteristics of the materials.

Not all such changes are easily transducible, perhaps not at this stage of the state of the art.

- Magnetic Sensor Types
- Magnetic field sensors
- Magneto - elastic sensors
- Magnetic elastic sensors
- Torque / force sensors
- Magneto resistive sensors
- Hall effect sensors or magneto galvanic sensors
- Distance or proximity sensors
- Wiegand and pulse wire sensors
- Superconducting quantum interference devices (SQUIDS)
- Magnetostriction

1. Magnetic Field Sensors

Developed following '**Δ**y effect' which in effect is observed as the change in Young's modulus with magnetization. The sensors are often termed as Acoustic Delay Line Components(ADLC).

2. Magneto - Elastic Sensors

Based on the fact that in a longitudinal field, torsion given in a ferromagnetic rod changes its magenetization. This is known as ‘matteucci effect’.

3. Magnetic Elastic Sensors

Produced using ‘villari effect’ in which a tensile or compressive stress changes magnetization or affects magnetization in some way.

4. Torque/Force Sensors

‘Widemann effect’ is used to develop the torque/ force sensors. In such sensors, torsion is produced in a ferromagnetic rod carrying a current when subjected to a longitudinal field.

5. Magneto Resistive Sensors

Becoming increasingly popular are developed on the basis of ‘Thomson effect’ which is basically a change in resistance of specified materials with magnetic field impressed.

6. Hall Effect Sensors or Magneto Galvanic Sensors

The common and widely used type magnetic sensors. These operate on the fact that a crystal carrying a current when subjected to a magnetic field perpendicular to the direction of the current, produces a transverse voltage.

7. Distance or Proximity Sensors

Developed based on ‘skin effect’ in which eddy current forces the current flowing through the interior of a material to move to its surface level.

8. Wiegand and Pulse Wire Sensors

A specific type of material when subjected to pulse voltage under stress shows switching effect which occurs due to barkhausen jump. This is utilized to produce such sensors. The effect is called ‘sixtus - tonks effect’ after the experimenter who demonstrated the effect.

9. Superconducting Quantum Interference Devices (SQUIDS)

It is used for varying application areas, are based on the superconducting state specifically, ‘flux quantization and joseph on effect’. These types of sensors have a resolution of the order of a few femto tesla (ft).

10. Magnetostriction

Used in combination with piezoelectric elements for field measurement. This effect is also known as ‘joule effect’ in which magnetization changes the shape of a ferromagnetic material body.

Principle

The ΔY effect is an outcome of magnetotriction. Change in dimension due to magnetotriction in a material is actually caused by rotation of the magnetization.

A demagnetized ferromagnetic material, when undergoes a mechanical stress, develops two types of stresses in it, namely,

1.The plain mechanical elastic strain, εs and

2.The magneto elastic strain εm.

Which is the result of reorientation of magnetic domains by the applied stress Sa, thus giving the Young's modulus of the demagnetized material as,

$$Y_{dm} = \frac{Sa}{\varepsilon_s + \varepsilon_m}$$

For a saturated sample no magneto elastic strain is produced because no further reorientation is possible and hence, the Young's modulus is,

$$\frac{\Delta Y}{Y_{dm}} = \frac{Y_{sm} - Y_{dm}}{Y_{dm}} = \frac{\varepsilon_m}{\varepsilon_s} \qquad Y_{sm} = \frac{Sa}{\varepsilon_s}$$

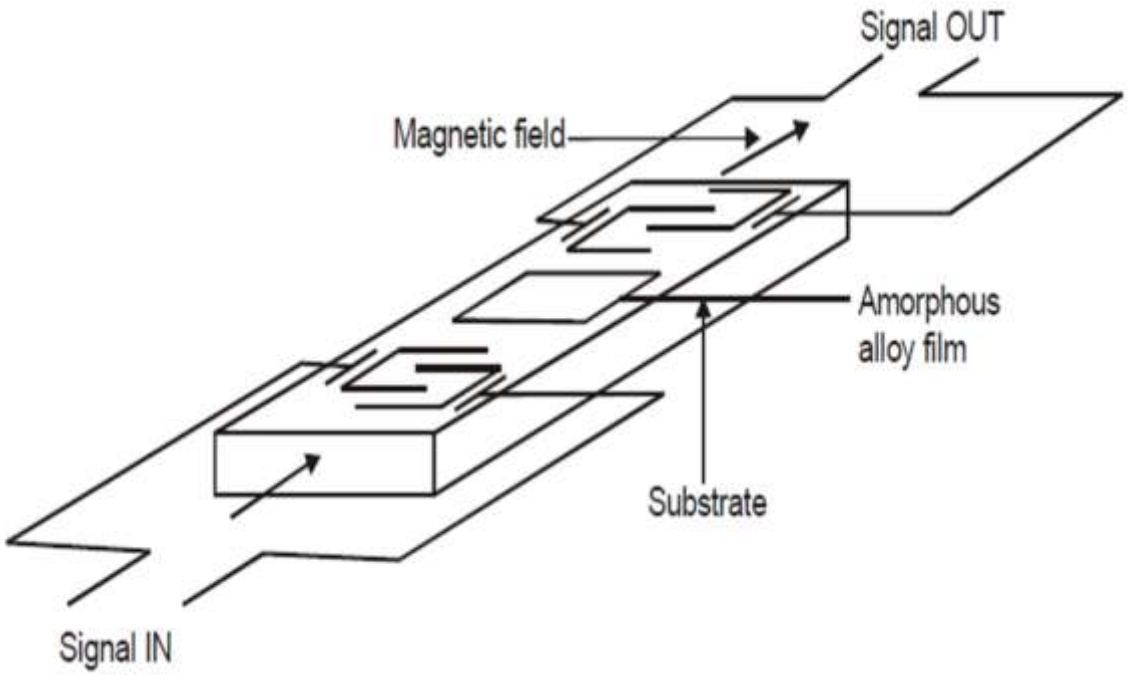

The sound velocity is given by the relation

$$v = \sqrt{\frac{Y}{\rho}}$$

The change in velocity Δv, in the film is given by,

$$\frac{\Delta v}{v} = \sqrt{\frac{\Delta Y}{Y}}$$

$$\theta = (\lambda_1 - \lambda_t)\frac{4l}{a}\frac{H_1 H_r}{H_1^2 + H_r^2}$$

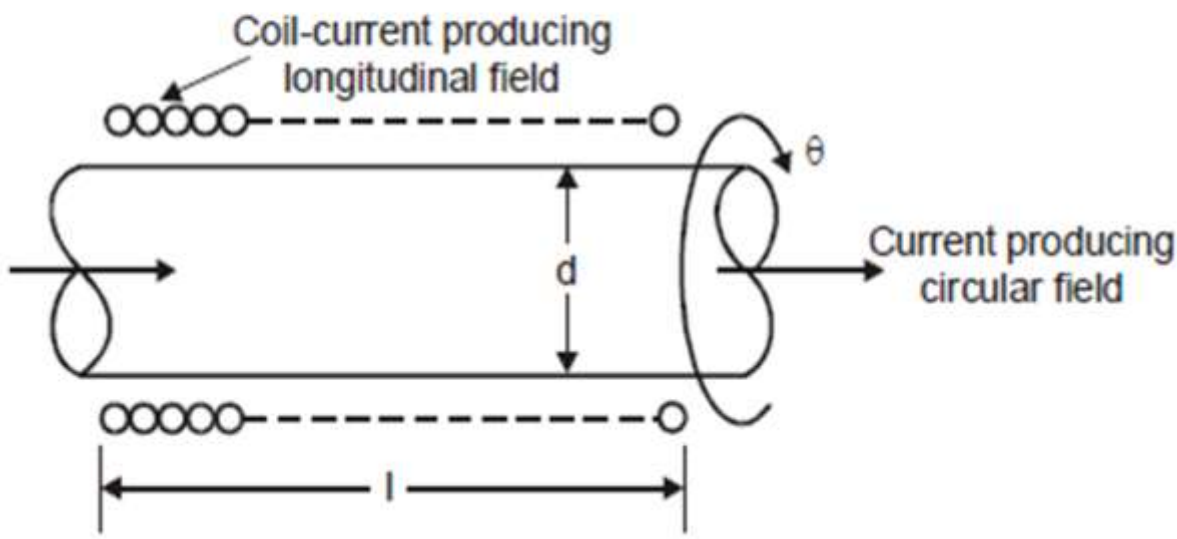

1. Widemann Effect

Widemann effect is used to make torque/force sensors.

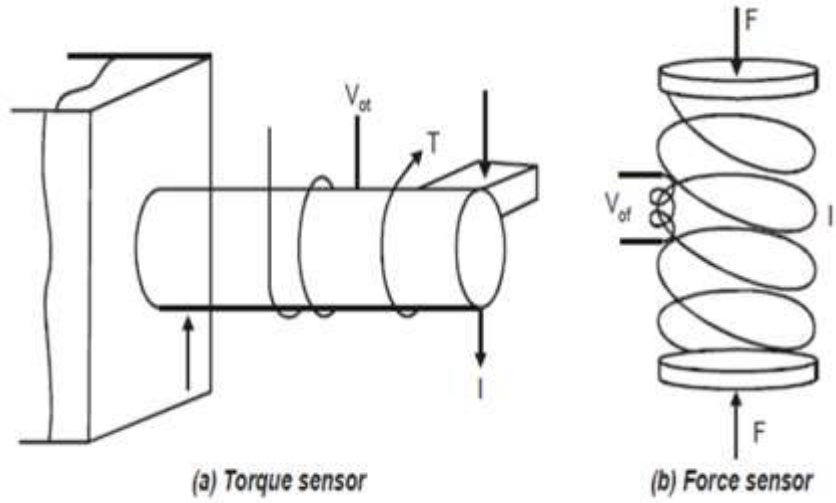

The Widemann effect has two inverse effects

i) When a ferromagnetic rod which is circularly magnetized, is twised a longitudinal magnetic field is produced in it and

ii) When such a rod with longitudinal magnetization is twisted, a

Circular magnetic field is produced in it which, essentially is the

Matteucci effect.

The magneto - mechanical coupling factor Kss is defined as the ratio of the elastic stress energy to the total stored energy such that,

$$K_{ss} = \frac{E_s}{E_s + E_m + E_{cr} + E_{ua} + E_N}$$

$$K_{ss} = \frac{E_s}{E_s + E_m}$$

Figure shows the theoretical and practical curves for soft alloy strip material with tensile load.

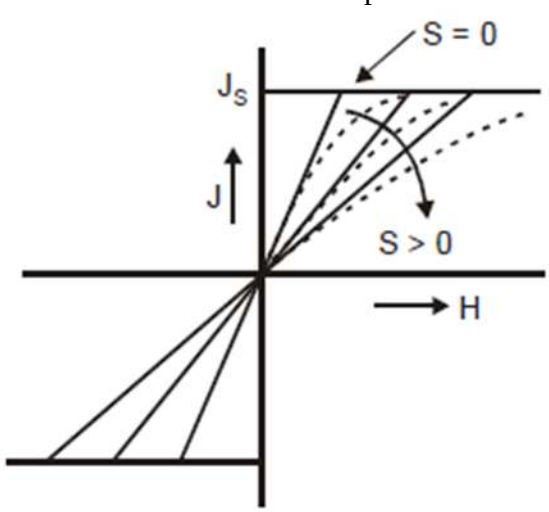

Villari Effect:

Based on the Villari effect, three basic types of magneto elastic sensors may be designed namely,

i) The type in which mechanical loading in unidirectional so as to produce compression or tension and this changes the inductance or permeability with the specimen having predefined magnetic flux path as in choke or coil type design.

ii) One in which mechanical loading changes the flux in two directions or in a plane as in circular rings or laminated cores and

iii) The third in which loading changes the flux spatially that is

3-dimensionally in torque transducer for shafts.

Inductance variation sensors

(a) Strip and (b) Pot core sensors

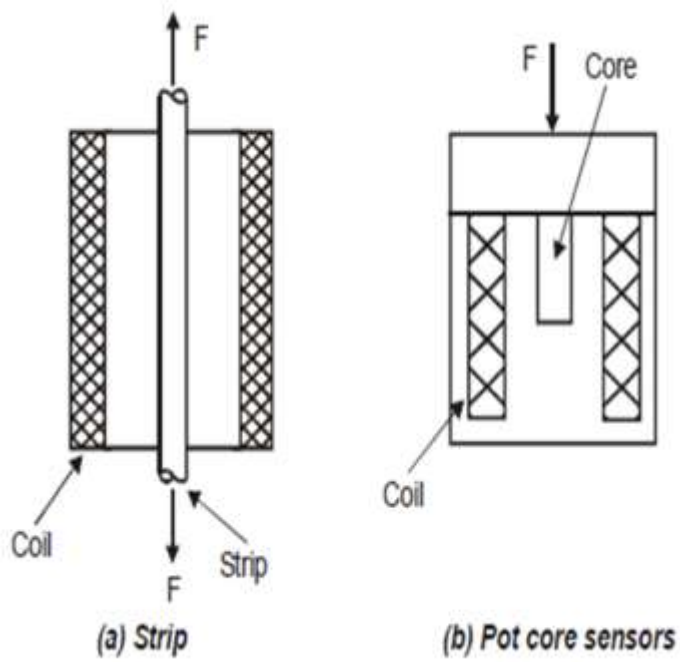

The most important are the torque sensors. If the shaft material does not have the requisite magnetic properties such as magnetotriction, an additional magnetic coating on the shaft surface produces the desired mechanical stress on this surface that is to be measured.

In a solid or hollow cylindrical shafts, stress developed in two principal orthogonal directions, one compressive and the other tensile, each at an angle of ± 45◦with the shaft axis in a screw like fashion around the shaft.

For a hollow shaft of inner and outer diameters Di and Do, the angle of torsion Φ,the length of the shaft l, torque produced is given

$$\pi = \frac{C \pi \phi}{321}\left(D_o^4 - D_i^4\right)$$

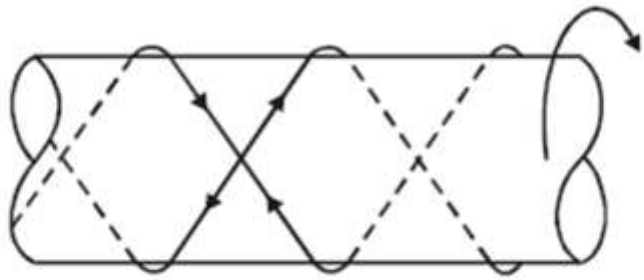

The maximum stress on the surface of the shaft is

$$S_m = \frac{16\, D_o\, T}{\pi\left(D_o^4 - D_i^4\right)}$$

and the maximum strain ε_m is

$$\varepsilon_m = \frac{S_m}{Y}(1+\nu) = \frac{16\, D_o\,(1+\nu)}{\pi\left(D_o^4 - D_i^4\right)Y}\, T$$

Where; ν= Poisson ratio

Two types of designs are (a) Yoke coil type and (b) The cylindrical coil type (which are mounted coaxially with respect to the shaft.

MAGNETO RESISTIVE SENSOR

Anisotropic Magnetoresistive Effect:

Magneto-resistive effects are observed in metals specially in ferromagnetic types and in such cases, it is known as anisotropic magneto-resistive effect (or) geometrical magneto-resistive effect for short samples in semiconductors.

1.Anisotropic Magnetoresistive Sensing

Magnetoresistive effect can be analyzed taking into account the complex ferromagnetic behaviour.

However for sensing purposes, knowledge of the relations between the direction of magnetization and resistivity is sufficient as also between the magnetization - direction and external fields.

If the angle between the direction of internal magnetization M and that of current in the sample I is Φ, then the resistivity is given by,

$$\rho(\phi) = \rho\alpha + (\rho\beta - \rho\alpha)\cos^2\phi$$

$\rho\alpha$ is the value ρ for $= \phi\ 90°$ and

$\rho\beta$ is the value ρ for $= \phi\ 0°$

The quantity (ρß- ρα)/ ρα specifies the Magnetoresistive effect or its coefficient which, in general is positive and quite large.

P(Φ) is not scalar and should produce and electric field Ea perpendicular to the external field Eb to generate a current density Jb, Ea is in the J-M plane which is the plane of the ferromagnetic material, but perperndicular to J so that

$$E_a = J_b\,\Delta\rho\sin\phi\cos\phi$$

where $\Delta\rho = \rho\beta - \rho\alpha$

If now, a bar of length l, width w and thickness t is considered with current I flowing along the length, From equation (1), the ressitance of the bar is

$$R(\phi) = \frac{\rho_\alpha l}{Wt} + \left(\frac{\Delta\rho l}{Wt}\right)\cos^2\phi$$

$$= R + \Delta R\cos^2\phi$$

and the voltage dro V_b is

$$V_b = \frac{\rho_\alpha I l}{Wt} + \left(\frac{\Delta\rho I l}{Wt}\right)\cos^2\phi$$

$$V_b = \frac{\Delta\rho I}{t}\sin\phi\cos\phi$$

The effect that produces Ea is called the planar hall effect.

Va is planar hall voltage which is dependent on the sign of Φ while the magnetoresistive voltage Vb does not depend on the sign of Φ .

If the swing ratio l/W>>1, the ratio of the instantaneous part of Vb and Va or the swing ratio l/W is much larger.

This makes Vbi >> Vai so that planar hall voltage is important is small length samples only.

Under the influence of an external field H, magnetization M rotates which can be calculated by evaluating the energy density ϵ in terms of angle ψ between M and the axis of lowest energy called the easy axis.

2. Semiconductor Magneto-resistors

When a semiconductor material is exposed to magnetic field, its resistance increases.

It is subsequently seen that Lorentz force acts perpendicular to the velocity V of a free charge carrier and the magnetic induction B and the charge carrier eventually collides with lattice to lose its velocity.

This is attributed to the Hall angle $\boldsymbol{\theta}$h between the electrical field Ex and the direction of the current.

This change in the direction of the current or its rotation increases the path length of the current flow as mentioned earlier but is observed as an increase in the resistance of the material.

When the field is weak, the change in resistivity is proportional to the square of the component of the field perpendicular to the current vector,

$$\rho_b = \rho_o (1 + H_R B \rho^2)$$

In fact, the geometry of the semiconductor plate and magnetic field are induced in the resistance ratio of the plate with and without field. For $\theta_h \leq 25°$.

$$\frac{R_B}{R_o} = \frac{\rho_B}{\rho_o}\left[1 + C_a (\mu_H B)^2\right]$$

and for $\theta_h \rightarrow \frac{\pi}{2}$

$$\frac{R_B}{R_0} = \frac{\rho_B}{\rho_0}\left[C_b + C_c \mu_H B\right]$$

3.Effect of Geometry:

In an isotropic material shaped as a square plate subjected to a magnetic field perpendicular to the plate surface and current supplying electrodes mounted on the width side, hall angle $\boldsymbol{\theta}$h is significant only in the regions close to the electrode.

And in the central part, the current paths are almost parallel to the length edges where the hall field tends to reduce the magneto-resistive effect.

To a certain extent, countered by reducing the l/W ratio.

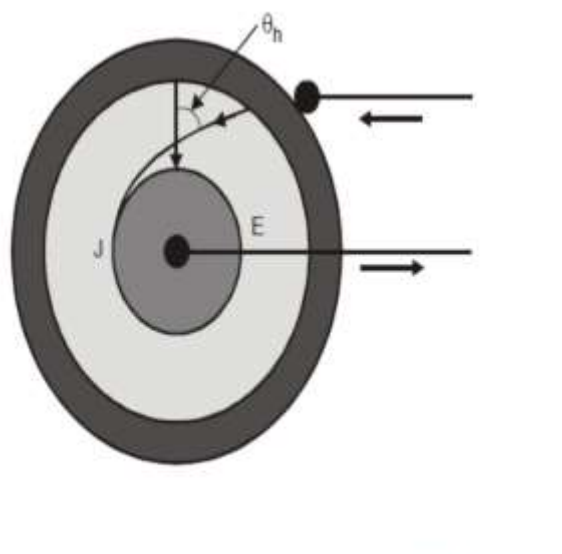

Design of Magnetoresistor with Radial E

4.Effect of Material:

Hall mobility dependent on the material. It should be larger, however, for better measurement.

Of the four possible base materials Ga As, In AS, Si and In Sb, the last one has the higher mobility of about 7.7 × 104 cm2/V–1/S–1 which is 1.5 times larger than that of In As, 30 times larger than that of Si and nearly 10 times larger than Ga AS.

However, temperature coefficient of resistance is also higher in In Sb, being – 2 × 10– 2 /°C.

For the other materials, the values are as follows,

$$\alpha_{\text{Ga AS}} = 8 \times 10^{-4}\ /°C$$

$$\alpha_{\text{In AS}} = 10^{-3}\ /°C \quad \text{and}$$

$$\alpha_{\text{Si}} = 5 \times 10^{-3}\ /°C$$

HALL EFFECT SENSOR

The most important of the magnetic sensor are the hall effect sensors. Hall effect sensors are also galvano-magnetic effect sensors.

Hall Effect

When a current is sent through a very long strip of extrinsic homogeneous semiconductor in the x (long) direction and across the plane xy perpendicular to it, a magnetic field is applied to produce a flux density BZ, then an electric field Ey in the direction of y is produced which is called the hall effect.

With electrodes across the strip in the ‘y’ direction, a voltage VH called the hall voltage can be collected which approximately given by

$$V_H = B_Z \, lx$$

Gulvanomagnetic effects in general, arise because of the action of the lorentz force on the charge carrier transport phenomena in condensed medium. The lorentz force is expressed as

$$F = e\,E + e\,[V \times B]$$

where e is the charge of the carrier

E is the electrical field

V is the carrier velocity and

B is the magnetic induction

If J is the total current density, then the carrier transport equation is

$$J = J_o \, \mu_H \, [J_o \times B]$$

where μ_H is known as the hall mobility and

A magnetic field also affects the electrical field potential and carrier concentration and hence it si not justified to write J = Jo for B = 0 as is apparent from equation 3.

If $\boldsymbol{\sigma}$ is the conductivity and D, the diffusion, co efficient Jo in general,

$$Jo = \boldsymbol{\sigma}\, E - e\, D\, \ddot{\nabla} n$$

which takes account of the drift and diffusion and transverse transport caused by the magnetic field is taken care of by the second term in above equation.

Hall mobility μH, is the product of the drift mobility of the carrier μ and the hall scattering factor r which is given by the appropriate ration of the relaxation time averages of the carriers over their energy distribution.

Basic Scheme of a Hall Device

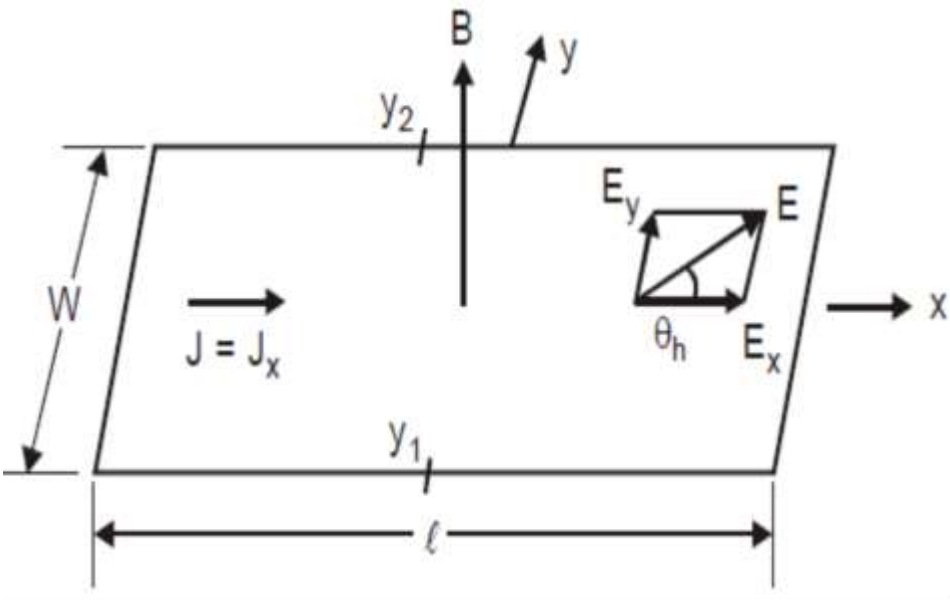

$$r = \frac{\left(\tau^2\right)}{\left(\tau\right)^2}$$

and $\mu_H = r\mu$

r = 1 for degenerate semiconductors or metals

r = 1.93 for scattering with ionized impurities while

r = 1.8 for accoustic phonons

Ey is the Hall field often represented as EH and this field would produce a voltage across the width of the strip. This transverse voltage called the hall voltage, VH is given by

$$V_H = \int_{y_2}^{y_1} E_H \, dy = -\mu H B_z E_x W$$

Another parameters that sometimes acquires importance in the discussion of hall sensors is the hall angle and is given by figure 3.35

$$\tan \theta_h = \frac{E_y}{E_x} = -\mu_H B_z$$

The hall effect has varying intensity in different materials. The materials for this effect are characterized by hall co efficient which is defined as,

$$h_c = \frac{E_H}{J \times B}$$

$$\text{from equation } R(H) = R \pm \Delta R - \Delta R \left(\frac{H_y}{H_o}\right)^2$$

$$h_c = \frac{E_y}{J_x \times B_z} = \frac{\mu_H E_x}{J_x}$$

For a special case of zero carrier concentration gradient for homogeneous material ($J_x = \sigma E_x$ and conductivity σ is given by eμn), the hall coefficient is

$$h_c = \frac{r}{e_n}$$

The hall voltage can be expressed in terms of the hall cofficient h_c using equation 3.57 and 3.60 as

$$V_H = -h_c J_x B_z W$$

EDDY CURRENT SENSORS

Both inductance and eddy current sensors follow the Faraday's law of induction which is mathematically states as,

$$\oint E dl = -\frac{d}{dt}\iint_A B \times dA$$

The voltage induced in closed turns of a coil is proportional to the time rate of change of flux linkage with it.

The essential difference between the two, however is that the inductance sensors use the effect of voltage induction whereas the eddy current types use the current induced due to alternating magnetic field.

Both these variations are, perhaps, industrially, the most useful ones as they are easily adapted to measure displacement, rpm, proximity, force, weight, acceleration, torque, pressure and so on.

A voltage in proportion to a variable to be measured, can be induced in a number of ways such as

i) By varying the coupling between the two coils,

ii) By changing inductance of two coils when a soft magnetic core is displace inside them,

iii) By varying magnetic flux linkage when an air gap is varied or when the direction of magnetic polarization is changed.

Two types of sensors

i) The eddy current tachometer and

ii) The eddy current proximity sensor steel body

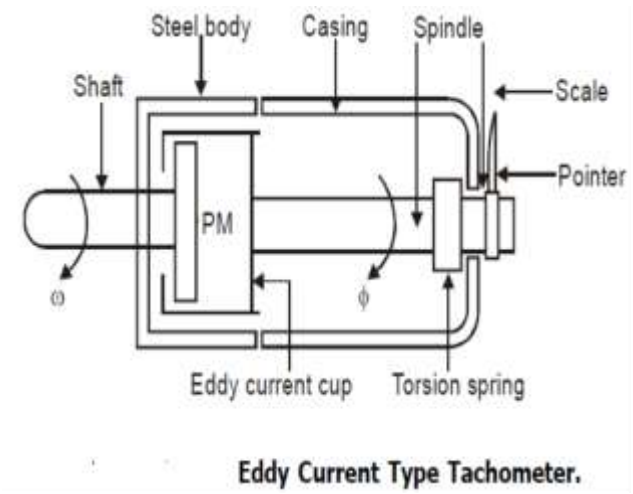

Eddy Current Type Tachometer.

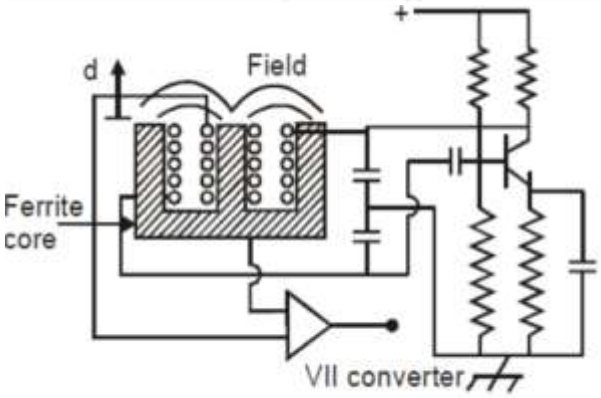

Eddy current proximity sensor

HEADING SENSORS (INTERIAL SENSORS)

Heading sensors can be proprioceptive(Gyroscope, inclinometer or compass). Allow, together with appropriate velocity information, to integrate movements to a position estimate.

It is used to determine the orientation of the robot in relation to a fixed frame/inclination.

Interial sensors are a class of sensors that measure the derivatives of the robot position variables.This class of sensors includes heading sensors as well as gyroscopes and accelerometers.

Heading sensors measure the horizontal or vertical angle referred to a given discretion.

Inclinometers, compass, gyrocompasses belongs to this group.

It provides an estimate of the position if used together with speed measurements.

The above procedure is also called dead reckoning and is a characteristic of marine navigation.

Compass

The compass has been around since at least 200 BC. The chinese suspended a piece of natural magnetite from a silk thread and used it to guide a chariot over land. Absolute measure for orientation based on earth magnetic field. It is known since the ancient time.

They are affected by the earth magnetic field (absolute measurement)

Physical measurements are

Mechanical (magnetic needle, hall effect, magnetostrictive effect, piezoelectric. Piezoelectric resonators have been used as standard clocks in recent electronics techniques because of their sharp resonance profiles.

We propose a magnetic field sensor consisting of a piezoelectric resonator and magnetostrictive magnetic layers.

It is verified that its resonance frequency changes in a magnetic field with sensitivity high enough to detect terrestrial magnetic field.

So, it is useful as an electronic compass that is in great demand from the mobile telecommunication technology.

Advantages

It can be readily downsized maintaining a high S/N because it detects an external field through change of the resonance frequency rather than the analogue output.

Limitations

- The earth magnetic field is rather weak
- The measurement is easily disturbed by near metallic objects.
- It is rarely used for indoor navigation

PRINCIPLE

The principle of a digital compass is based on measuring the direction of Earth's magnetic field.

Many cost effective digital compasses are built with hall effect sensors, which are based on the principle that electric potential changes in a semiconductor when it is exposed to a magnetic field.

E.g., Allegro A132X family hall effect sensors, where the presence of a south pole magnetic field perpendicular to the IC package face increases the output voltage from its neutral value, proportional to the magnetic field applied depending on the sensitivity of the device.

A single hall effect sensor measures flux in one dimension.

To measure the two axes of magnetic fields, two of these sensors are placed at 90° angles.

The resolution obtained with hall effect sensors is low and prone to errors, particularly due to interfering magnetic fields.

To measure magnetic field, four sensors are connected in a bridge configuration with each resistor oriented to maximize the sensitivity and minimize the temperature effects.

The values of the resistors will change when they are exposed to a magnetic field and the bridge will be imbalanced, thus generating an output voltage proportional to the magnetic field strength.

Digital compasses developed with this technology are reliable, and they have good resolution and fast response. Nevertheless, they are also sensitive to interfering magnetic fields.

Therefore, using them in manmade environments requires caution.

Examples : Devantech's CMPSO3 magnetic compass which uses the philips,KMZ51 magnetic field sensor and the honeywell HMR300 digital compass module that provides heading, pitch and roll outputs for navigation.

PHOTOGRAPHIC VIEW OF COMPASS

2. Gyroscope:

MEMS gyroscopes detect rotational rate about the X, Y and Z (or roll), pitch and yaw) axes.

When the gyroscope is rotated about any of these axes, the corioli's effect causes a deflection, which is detected, demodulated and filtered to produce a voltage that is proportional to the angular rate.

Analog Device's ADISI6485 is example of a MEMS – based gyroscope, which provides three axes gyroscope readings in digital form via serial parallel interface (SPI) bus.

MECHANICAL GYROSCOPE

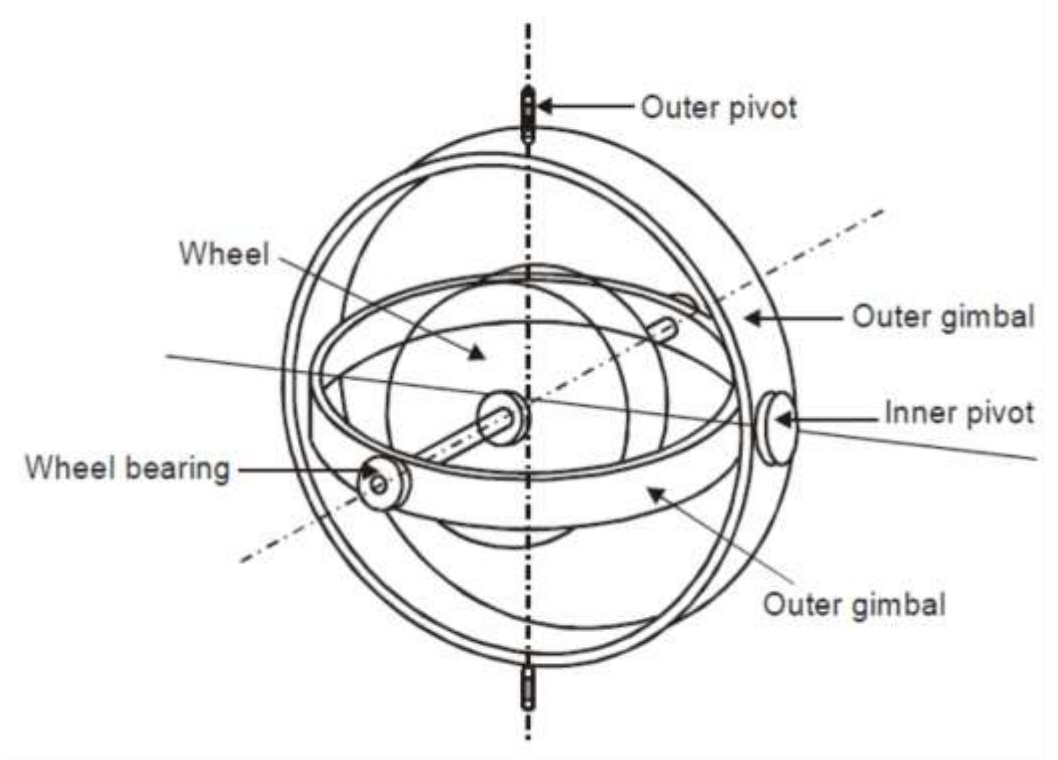

ELECTRICAL GYROSCOPE

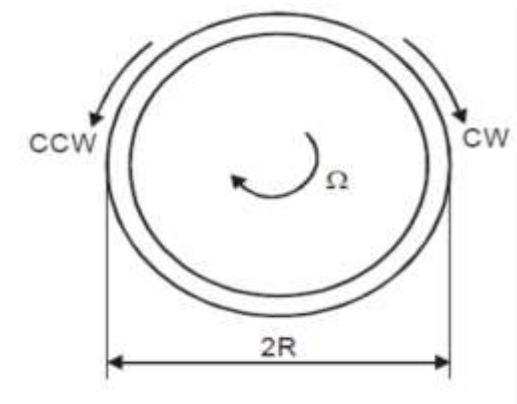

OPTICAL GYROSCOPE

Single axis optical gyro

3-axis optical gyro

3.Inclinometers

Inclinometer are instruments for measuring angle of tilt, elevation or depression of an object with respect to local gravity vector. Inclinometers measure both inclines (positive slopes, as seen by an observer looking upwards) and declines (negative slops as seen by an observer looking downward).

Sensor technologies for inclinometers include accelerometer, capacitive, gas bubble in the liquid and pendulum.

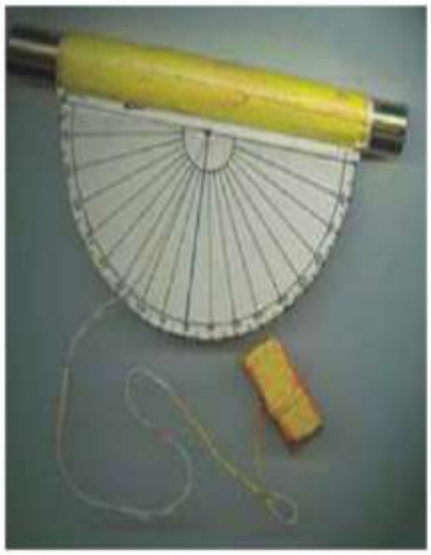

UNIT-IV

OPTICAL, PRESSURE AND TEMPERATURE SENSORS

Photo conductive cell, photo voltaic, photo resistive, LDR-Fiber optic sensors-pressure sensors- Diaphragm, Bellows, piezoelectric- Tactile sensors, Temperature-IC, Thermistor, RTD, Thermocouple.Acoustic sensors-flow and level measurement, Radiation sensors-smart sensors-Flim sensor, MEMS and Nano sensors, LASER sensors.

PHOTO CONDUCTIVE CELL

Electric conduction in semiconductor materials occurs when free charge carriers

e.g., electrons are available in the material when an electric field is applied.

In certain semiconductors, light energy falling on them is of the correct order of magnitude to release charge carriers which increase flow of current produced by an applied voltage.

The increase of current with increase in light intensity with the applied voltage remaining constant means that the resistance of semiconductors decreases with increase in light intensity.

Therefore, these semiconductors are called photoconductive cells or photo resistors or light dependent resistor (LDR), since incident light effectively varies their resistance.

Photoconductive cells are made by chemically sinterning the required powder (Cd S) or (Cd Se) into tablets of the required shape and enclosing them in a protective envelope of glass or plastic. Electrodes are deposited on the tablet surface and are made of materials which give an ohmic contact, but with low resistance compared with that of the phtoconductor.

Gold is typically used. The electrodes are usually inter digital i.e., in the form of interlocked fingers or combs as shown in figure.

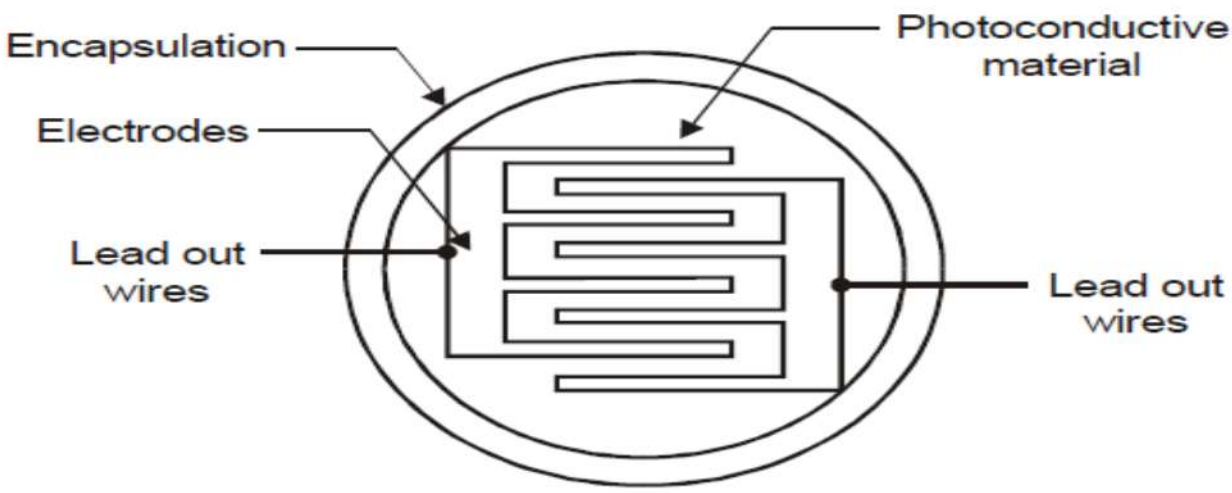

Photoconductive Cell

Characteristics of Photoconductive Cells

Characterisitics of Photoconductive cells

S.No	Photoconductor	Time constant	Spectral Band
1.	CdS	100 ms	0.47 - 0.71 μm
2.	CdSe	10 ms	0.6 - 0.77 μm
3.	PbS	400 μs	1 - 3 μm
4.	PbSe	10 μs	1.5 - 4 μm

1.Sensitivity

The sensitivity of a photodetector is the relationship between the light falling on the device and the resulting output signal. In the case of a photocell, one is dealing with the relationship between the incident light and the corresponding resistance of the cell.

Defining the sensitivity required for a specific application can prove to be one of the more difficult aspects in specifying a photoconductor.

In order to specify the sensitivity one must, to some degree, characterize the light source in terms of its intensity and its spectral content.

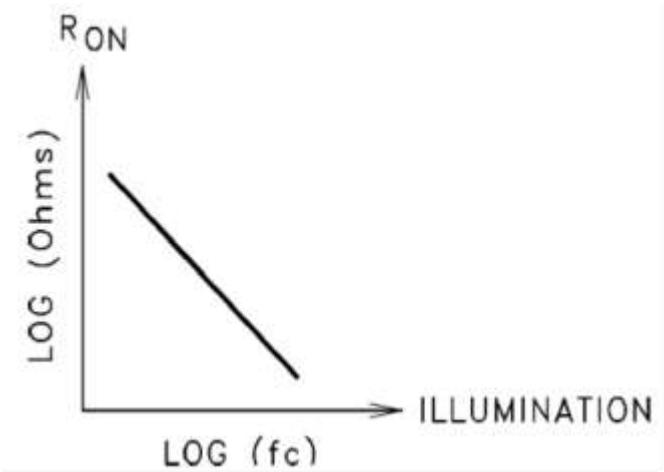

2. Spectral Response

Like the human eye, the relative sensitivity of a photoconductive cell is dependent on the wavelength (color) of the incident light.

Each photoconductor material type has its own unique spectral response curve or plot of the relative response of the photocell versus wavelength of light.

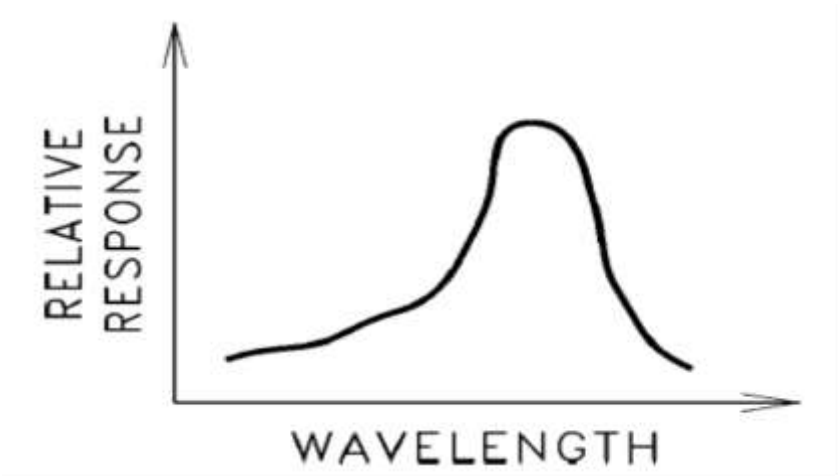

3. Resistance Tolerance

The sensitivity of a photocell is defined as its resistance at a specific level of illumination. Since no two photocells are exactly alike, sensitivity is stated as a typical resistance value plus an allowable tolerance. Both the value of resistance and its tolerance are specified for only one light level. For moderate excursions from this specified light level the tolerance level remain more or less constant. However, when the light level the tolerance level remain more or less constant.

However, when the light level is decades larger or smaller than the reference level the tolerance can differ considerably. As the light level decreases, the spread in the tolerance level increases. For increasing light levels the resistance tolerance will tighten.

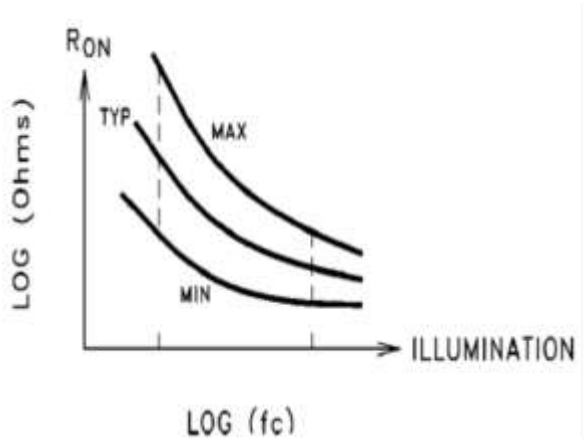

Dual Element Photocell Typical Matching Ratios				
0.01 fc	0.1 fc	1.0 fc	10 fc	100 fc
0.63 - 1.39	0.74 - 1.27	0.75 - 1.25	0.76 - 1.20	0.77 - 1.23

4.Dark Resistance

As the name implies, the dark resistance is the resistance of the cell under zero illumination lighting conditions.

In some applications this can be very important since the dark resistance defines what maximum "leakage current" can be expected when a given voltage is applied across the cell.

Too high a leakage current could lead to false triggering in some applications.

The dark resistance is often defined as the minimum resistance that can be expected 5 seconds after the cell has been removed from a light intensity of 2 fc.

Typical values for dark resistance tend to be in the 500k ohm to 20M ohm range.

5. Temperature Coefficient of Resistance

Each type of photoconductive material has its own resistance versus temperature characteristic.

Additionally, the temperature coefficients of photoconductors are also dependent on the light level the cells are operating at.

From the curves of the various types of materials it is apparent that the temperature coefficient is an inverse function of light level.

Thus, in order to minimize temperature problems it is desirable to have the cell operating at the highest light level possible.

6. Speed of Response

Speed of response is a measure of the speed at which a photocell responds to a change from light-to-dark or from dark-to-light.

The rise time is defined as the time necessary for the light conductance of the photocell to reach 1-1/e (or about 63%) of its final value.

The decay or fall time is defined as the time necessary for the light conductance of the photocell to decay to 1/e (or about 73%) of its illuminated state.

At 1 fc of illumination the response times are typically in the range of 5 msec to 100 msec.

The speed of response depends on a number of factors including light level, light history, and ambient temperature. All material types show faster speed at higher light levels and slower speed at lower light levels.

Storage in the dark will cause slower response than if the cells are kept in the light. The longer the photocells are kept in the dark the more pronounced this effect will be. In addition, photocells tend to respond slower in colder temperatures.

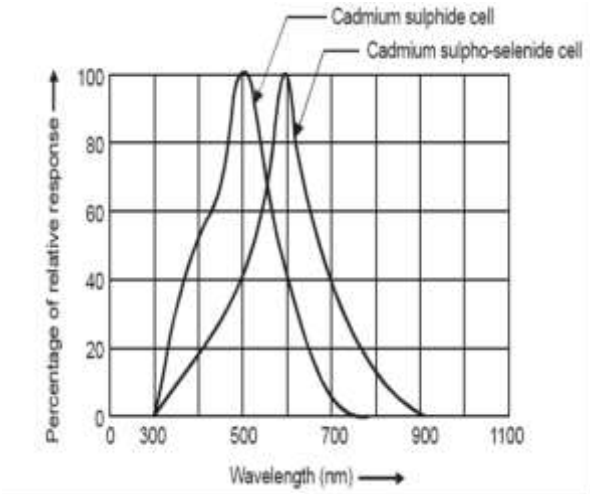

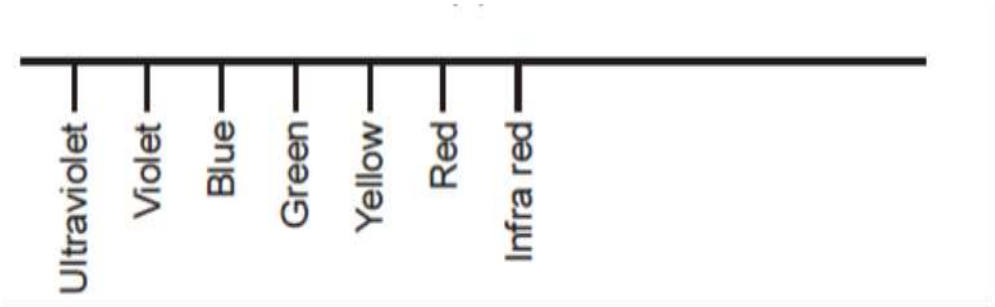

The photoconductor device described above is also called a bulk photoconductor.

The photoconductor has a very high resistance at very low illumination levels, which is of the order of mΩ.

The higher the intensity of light, the lower is the resistance.

The resistance drops to a few KΩ when exposed to light.

When using a photoresistor for a particular application it is important to select the proper dark resistance as well as the suitable sensitivity. The sensitivity of photoresistive transducer is defined as,

$$S = \frac{\Delta R}{\Delta H} \ \Omega/W-m^2$$

ΔR = Change in resistance, W and

ΔH = Change in irradiation, $\Omega/W-m^2$

The spectral response of the sensor must match that of the light source.

A photoconductor has a relatively large sensitive area. A small change in light intensity causes a large change in resistance. It is common for a photoconductive element to exhibit a resistance change of 1000 : 1 for a dark to light irradiance change of 5 × 10–3 W/m2 to 50 W/m2 .

The relationship between irradiance and resistance is however, not linear. It is closely an exponential relationship.

The result may be written as:

$$R_t = R_i + (R_f - R_i)\left[1 - \exp\left(-\frac{t}{\tau}\right)\right]$$

R_f = Dark resistance, Ω

R_i = Final resistance after application of beam, Ω

R_t = Resistance at any time, t

2.PHOTO VOLTAIC CELL

It is an important class of photo electrons.

They generate a voltage which is proportional to EM radiation intensity.

They are called photo voltaic cells because of their voltage generating characteristics.

They, in fact, convert the EM energy into electrical energy. They are passive transducers i.e., they do not need an external source to power them.

The cell is a giant diode, constructing a PN junction between appropriately doped semiconductors.

Photons striking the cell pass through the thin P - doped upper layer and are absorbed by electrons and holes.

The depletion zone potential of the PN junction then separates these conduction holes and electrons causing a difference of potential to develop across the junction.

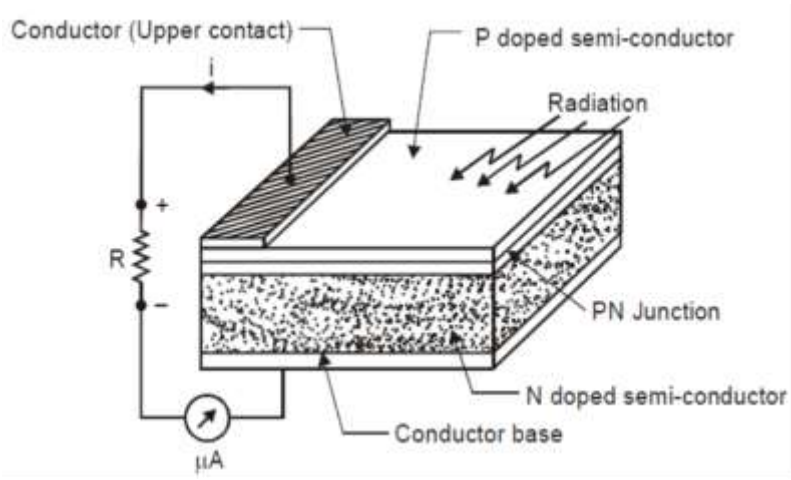

Working principle

The cell is a large exposed diode that is constructed using a pn junction between appropriately doped semiconductors.

Photons hitting the cell pass through the thin p-doped upper and are absorbed by electrons in the n-doped layer.

This causes conduction electrons and holes to be created

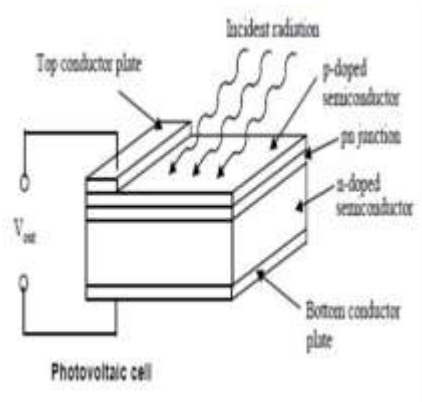

The upper terminal is positive and the lower negative.

In general, the open-circuit voltage V that is developed on a photovoltaic cell varies logarithmically with the incident radiation intensity according to the following equation:

V= Vo ln(Ir)

where

Ir = the radiation intensity in W/m2

Vo = the calibration voltage in volts

V = the unloaded output voltage in volts

The open circuit voltage is given by

$$E_0 = E_c \log_e E_e \text{ (V)}$$

where

E_c = Calibration voltage, V and

E_e = Radiant incidence, W/m^2

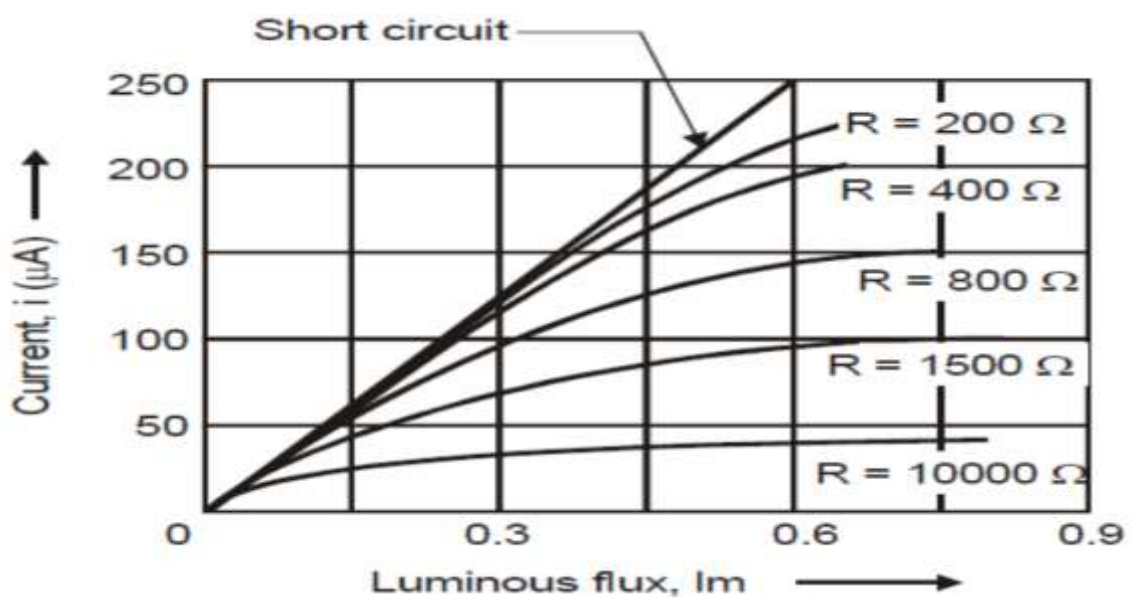

Conductive V/S Luminous Flux Characteristics for a Photovoltaic Cell

These characteristics shows that the current as a function of the cell incident luminous flux and hence micro ammeter shown in figure may be directly calibrated to read luminous flux or luminous intensity or illuminance.

The photovoltaic cells can operate satisfactorily in the temperature range of 100 to 125°C.

The temperature changes have little effect on short circuit current but affect the open circuit voltage considerably.

These changes may be of the order of a few mV/°C in output voltage

Typical Photovoltaic Cell Characteristics

Cell Material	*Time Constant*	*Spectral Band*
Silicon (Si)	20μs	0.44 μm - 1 μm
Selenium (Se)	2 ms	0.3 μm - 0.62 μm
Germanium (Ge)	50 μs	0.79 μm - 1.8 μm
Indium Arasonide (I_n As)	1 μs	1.5 μm - 3.6 μm (cooled)
Indium Antimonide (In Sb)	10μs	2.3 μm - 7 μm (cooled)

Advantages

The electricity produced by the solar cells is clean and silent. Because they do not use fuel other than sunlight, PV systems do not release any harmful contamination of air or water into the environment, deplete natural resources or endanger human or animal health.

Photovoltaic systems are silent and visually discrete.

Small-scale solar plants can take advantage of unused space on the roofs of existing buildings.

Photovoltaic cells were originally developed for use in space, where repair is extremely expensive, if not impossible. Photovoltaic energy still feeds almost all satellites that circulate through the earth, since it works reliably for long periods of time with little maintenance.

PHOTO RESISTIVE

In photo resistors, based on the incident light, an electron is excited in the conduction band rather than being left as free electron from the lattice structure of the photo conducting material.

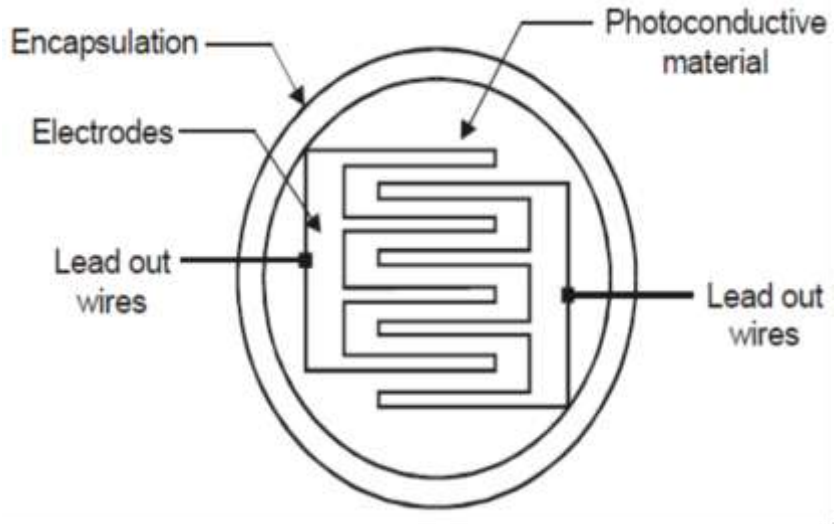

PHOTO RESISTIVE

A photoresistor is also called a light-dependent resistor (LDR), photoconductor, or photocell since its resistance changes as incident light intensity changes.

The relationship between the resistance and light intensity can be described by the characteristic curve of a photoresistive sensor.

The sensor's spectral response (see Figure 1.b) is about 550 nm (yellow to green region of visible light).

When placed in the dark, its resistance is as high as 1 MΩ and then falls to 400 Ω when exposed to bright light.

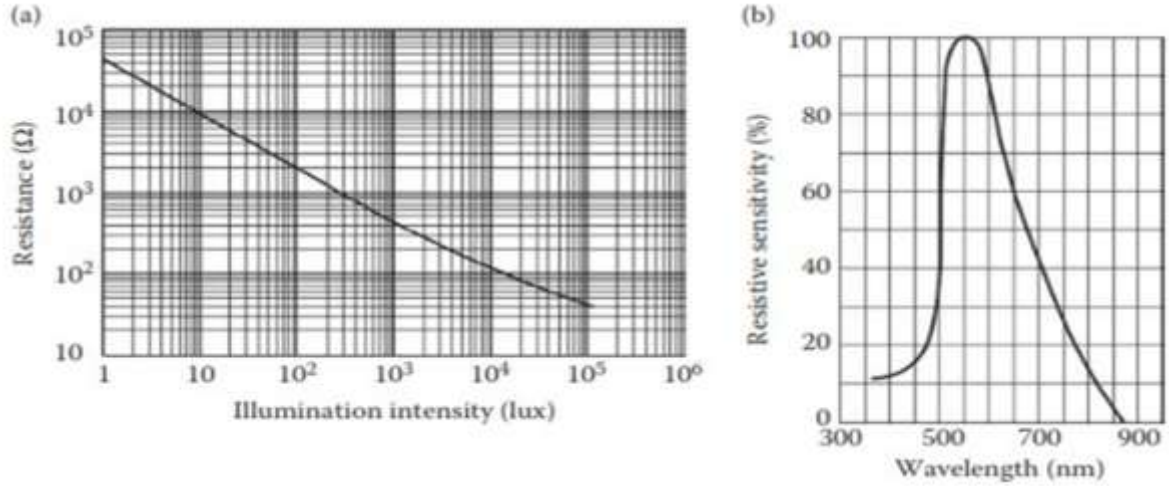

Key performance characteristics of photoresistive sensors

1.Responsivity Rd

The ratio of detector output to light input. It measures the effectiveness of the detector in transducing electromagnetic radiation to electrical voltage or current.

If the sensor's output is voltage, Rd is the ratio of the root mean square (RMS) of the output voltage VRMS to the incident radiant power Φe (in watts):

$$R_d = V_{\mathrm{RMS}}/\Phi_e$$

If the sensor's output is current, Rd is the ratio of the RMS of the output current IRMS to the incident radiant power Φe (in watts) :

$$R_d = I_{\mathrm{RMS}}/\Phi_e$$

Noise equivalent power (NEP): the minimum detectable signal level defined as the radiant power that produces an output voltage equal to the noise voltage of the sensor.

$$\mathrm{NEP} = \frac{E_e A_d}{V_s/V_n}$$

where

Ee is the power density at the surface of the sensor in W · cm-2 is the sensitive area of the photodetector in cm2, and

VS/Vn is the signal-to-noise ratio.

NEP has a unit watt (W).

Detectivity D*: Measure of the intrinsic merit of a sensor material.

It is a function of the sensitive area of the photodetector Ad (cm2), bandwidth of the measuring system B (Hz), and NEP (W).

$$D^* = \frac{\sqrt{A_d B}}{\mathrm{NEP}}$$

The unit of the detectivity D* is cm · Hz1/2 · W−1; D* is often used to compare different types of detectors.

The higher the value of D*, the better the detector.

Quantum efficiency (QE):

The effectiveness of a photodetector in producing electrical current when exposed to radiant energy. QE (in percentage) can be described by

$$QE = \frac{\text{Number of electrons ejected}}{\text{Number of incident photons}} \times 100\%$$

Construction And Circuit Symbols Of A Photoresistor.

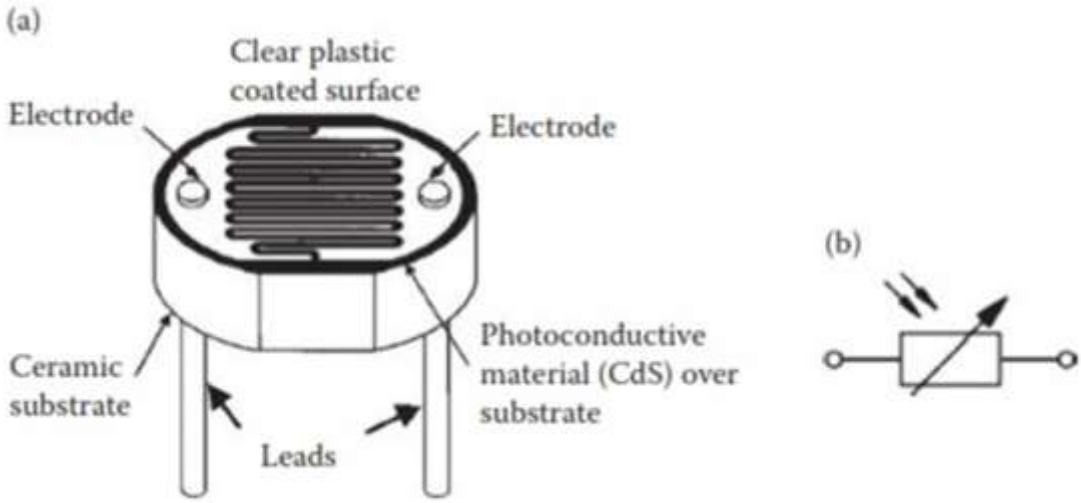

To increase "dark" resistance values and reduce "dark" current, the resistive path is often designed as a zigzag pattern across the ceramic substrate.

Materials used in photoresistors include cadmium sulfide (CdS), lead sulfide (PbS), cadmium selenide (CdSe), lead selenide (PbSe), and indium antimonide (InSb).

CdS is the most sensitive photoresistor to visible light.

Its resistance value can change from many megaohms in the dark to several kiloohms when exposed to light.

PbSe is the most efficient in near-infrared light photoresistor.

Photoresistors, compared to photodiodes or phototransistors, respond relatively slow to light changes.

For example, a photoresistor cannot detect the characteristic blinking of fluorescent lamps (turning ON and OFF at the 60 Hz power line frequency), but a phototransistor (which has a frequency response up to 10,000 Hz) can.

If both sensors are used to measure the same fluorescent light, the photoresistor would show the light to be always ON and the phototransistor would show the light to be blinking ON and OFF.

Thus, phototransistors can be used to detect an incandescent lamp that acts as a timing start indicator.

Photocells are commonly used to find certain objects through measuring the reflectivity of a light source such as a red LED (light-emitting diode), but they are sensitive to ambient lighting and usually need to be shielded.

LDR

An LDR is a component that has a (variable) resistance that changes with the light intensity that falls upon it. This allows them to be used in light sensing circuits.

Variation in resistance with changing light intensity

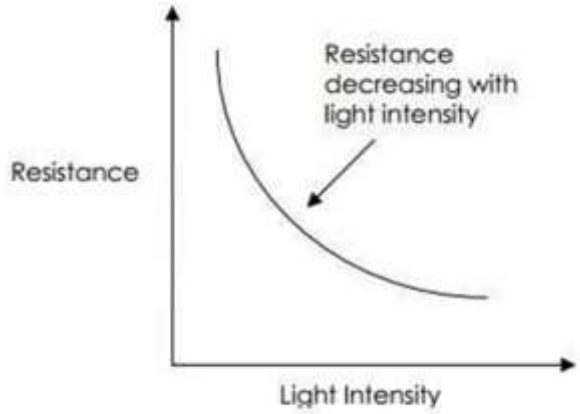

Applications of LDRs

1.Lighting switch

The most obvious application for an LDR is to automatically turn on a light at a certain light level. An example of this could be a street light or a garden light.

2.Camera shutter control

LDRs can be used to control the shutter speed on a camera. The LDR would be used to measure the light intensity which then adjusts the camera shutter speed to the appropriate level.

Example - LDR controlled Transistor circuit

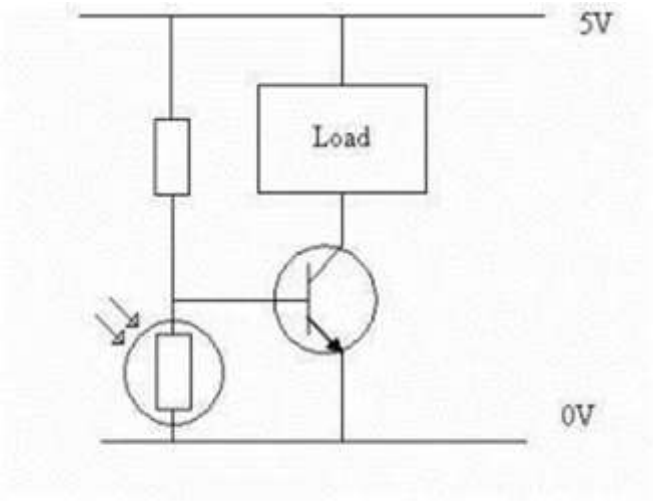

The circuit shows a simple way of constructing a circuit that turns on when it goes dark.

In this circuit the LDR and the other Resistor form a simple 'Potential Divider' circuit, where the center point of the Potential Divider is fed to the Base of the NPN Transistor.

When the light level decreases, the resistance of the LDR increases.

As this resistance increases in relation to the other Resistor, which has a fixed resistance, it causes the voltage dropped across the LDR to also increase.

When this voltage is large enough (0.7V for a typical NPN Transistor), it will cause the Transistor to turn on.

The value of the fixed resistor will depend on the LDR used, the transistor used and the supply voltage.

FIBRE OPTIC SENSORS (FIBRE OPTIC TRANSDUCERS)

In fiber optic transducers, optical fiber is used as sensing element which can transmit optical (light) signals from remote place to destination place where the processing of signal s take place.

Optical fiber is mainly preferred because of signals take place.

Optical fiber is mainly preferred because of its small size and less weight.

Advantages:

1. Do not require any electrical power at the remote place of transmission.

2. Immunity to electromagnetic interference and non-conduction of electricity.

Principle of Fibre Optic Transmission

1. TIR (Total Internal Reflection)

The light transmission through the optical fiber is done based on the principle of TIR. It states that all the light striking a boundary between two media will be totally reflected. There is no less in light energy across the boundary.

For Principle of TIR to take place, the following two conditions are to be satisfied.

i. The glass around the centre of the fiber (core) should has higher refractive index (n1) than that of the material (cladding) surrounding the fibre (n2).

ii) The light should be incident at an angle of Φ which will be greater than the critical angle $\boldsymbol{\theta}$c.

$$\sin \theta_C = \frac{n_2}{n_1}$$

Reflection, refraction and total internal reflection of light waves are shown in figure

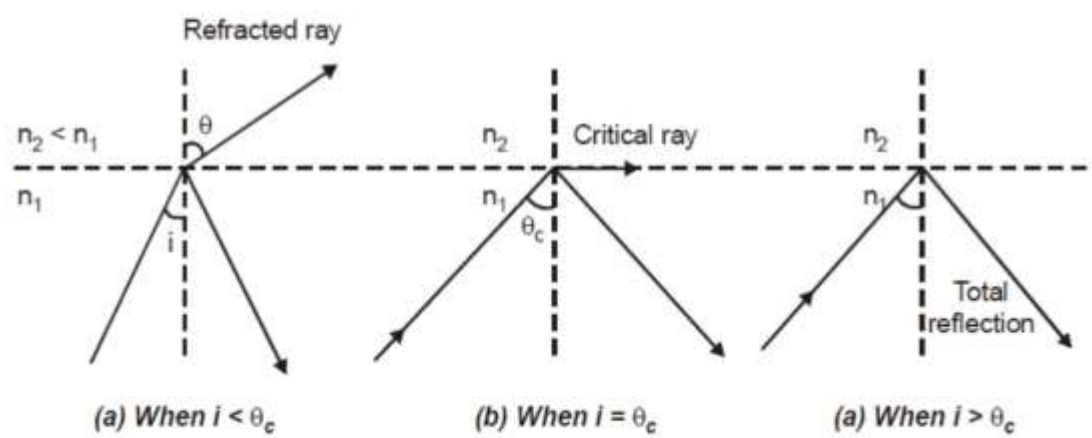

Total Internal Reflection of Light Waves

Types of Fiber Optic Sensors

There are two types of fibre optic sensors. They are,

1. Instrinsic Type Sensor

In an intrinsic type fibre optic sensor, based on the measurement of variable like pressure, temperature, level, etc., the properties of the fiber will be varied.

Here the optical fiber itself can act as a sensing material.

2. Extrinsic Type Sensor

In an extrinsic type fibre optic sensor, the optical sensor acts as a guide for the light from the source to the sensing device and vice-versa. Due to the interaction at the sensing side has attained a change in its parameters.

Applications of Fibre Optic Transducer

Used for the measurement of many variables such as temperature, pressure, liquid level, flow, etc., (optical, radiation happens to be the energy required for the respective measurement with fiber as the sensing source as well as the medium).

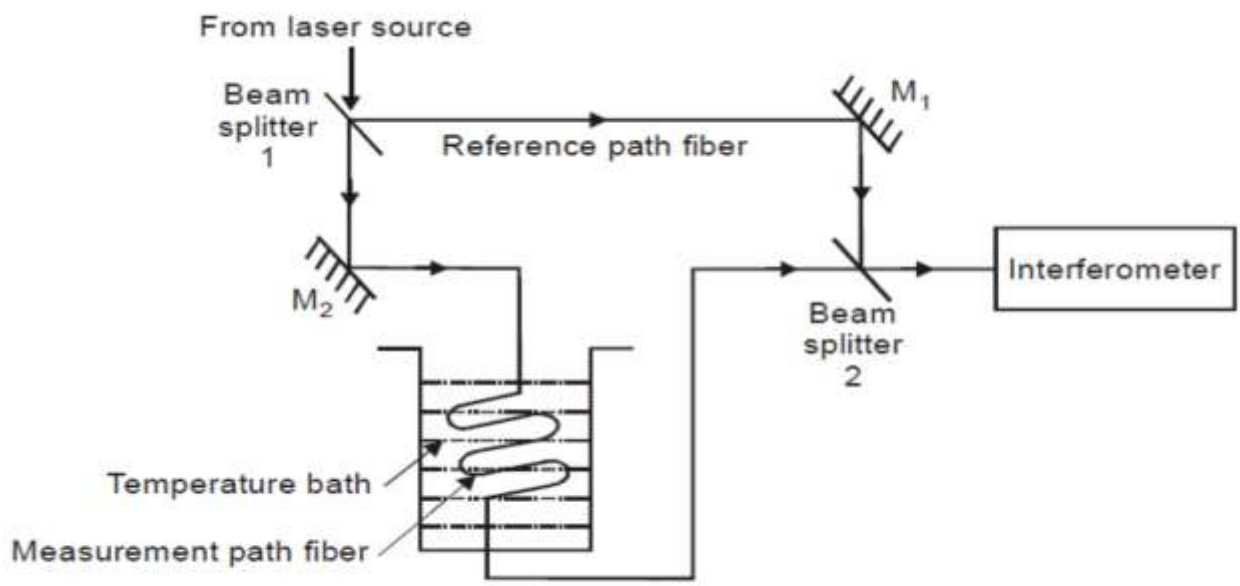

Fibre Optic Transducer for Temperature Measurement

Fibre Optic Transducer for Temperature Measurement with 3 dB Optic Couples

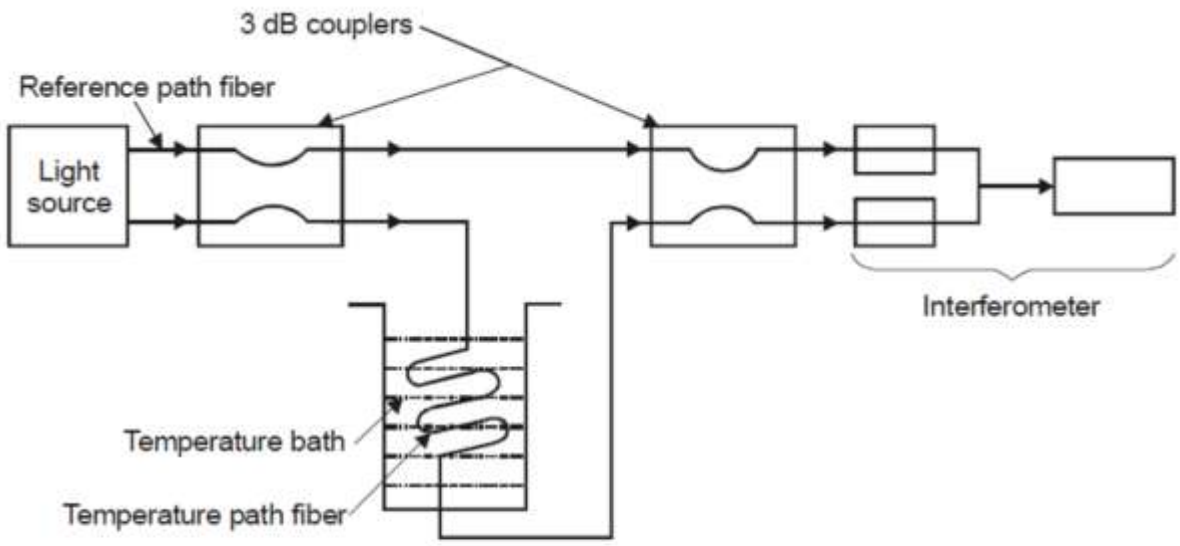

Fibre Optic Transducer for Temperature Measurement with 3 dB Optic Couples

2.a.Fiber Optic Transducer for Liquid Level Measurement

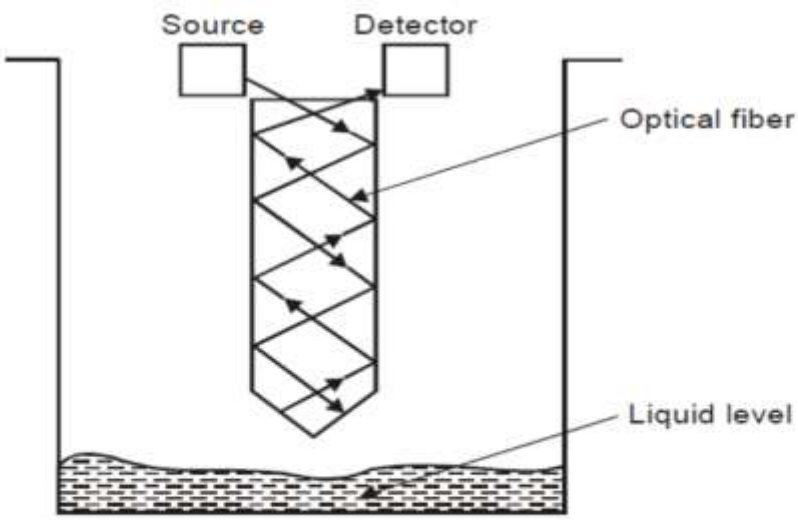

Liquid Level Measurement Using Fiber Optic Sensor Mounted Below the Liquid Level

2.b.Liquid Level Measurement using Fiber Optic Sensor Covering the Liquid Level

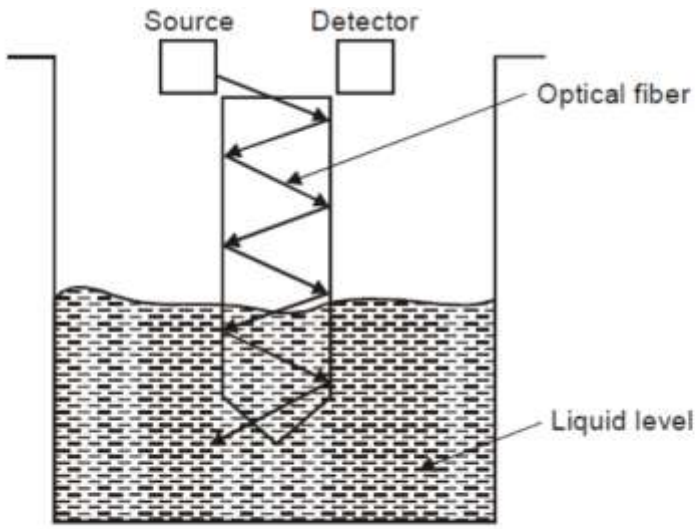

Liquid Level Measurement using Fiber Optic Sensor Covering the Liquid Level

3.Fiber Optic Transducer for Fluid Flow Measurement

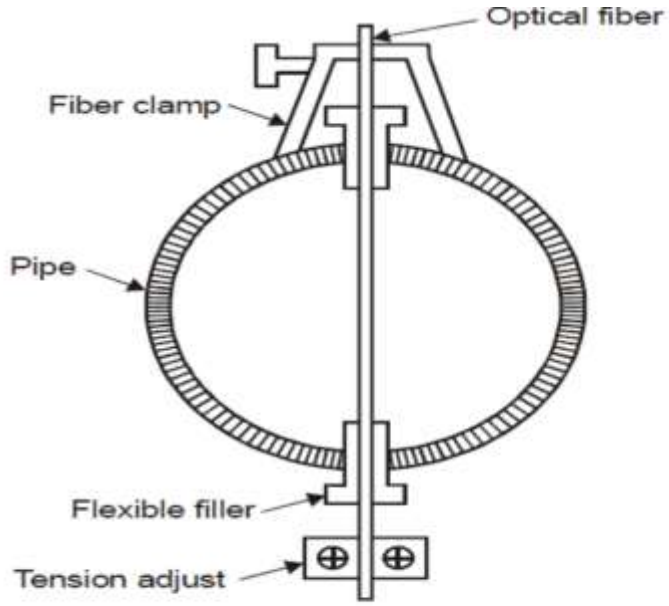

Fibre Optic Transducer for the Measurement of Fluid Flow

4.Fiber Optic Transduce for Acoustic Pressure Measurement

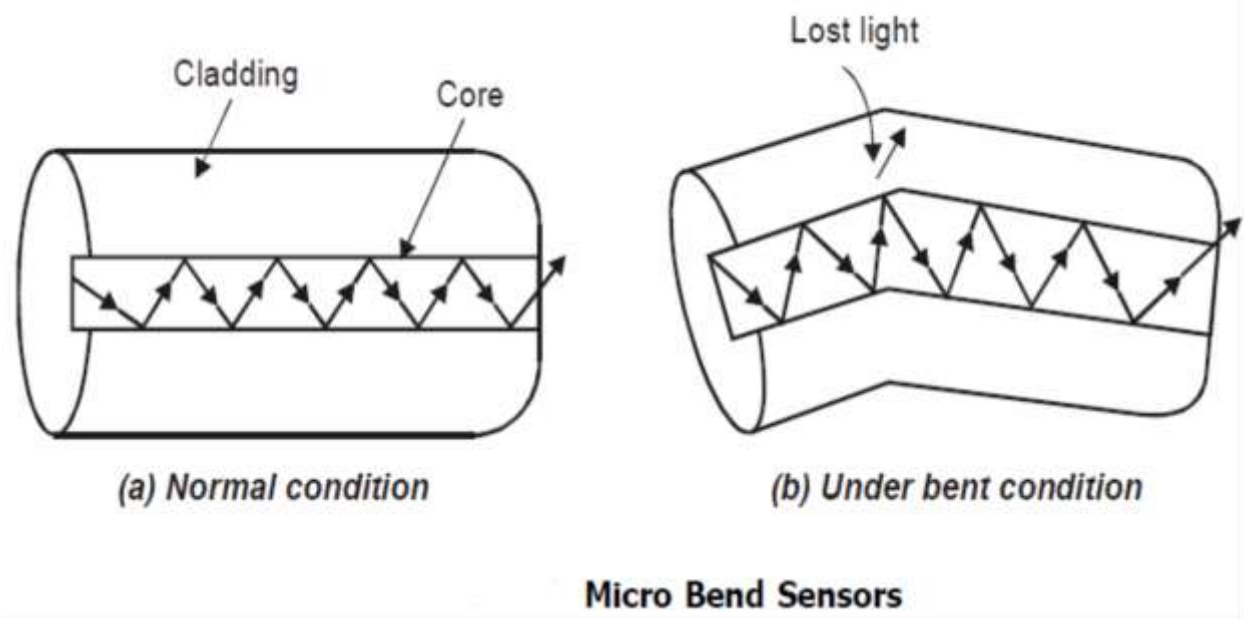

4.Fiber Optic Transduce for Acoustic Pressure Measurement

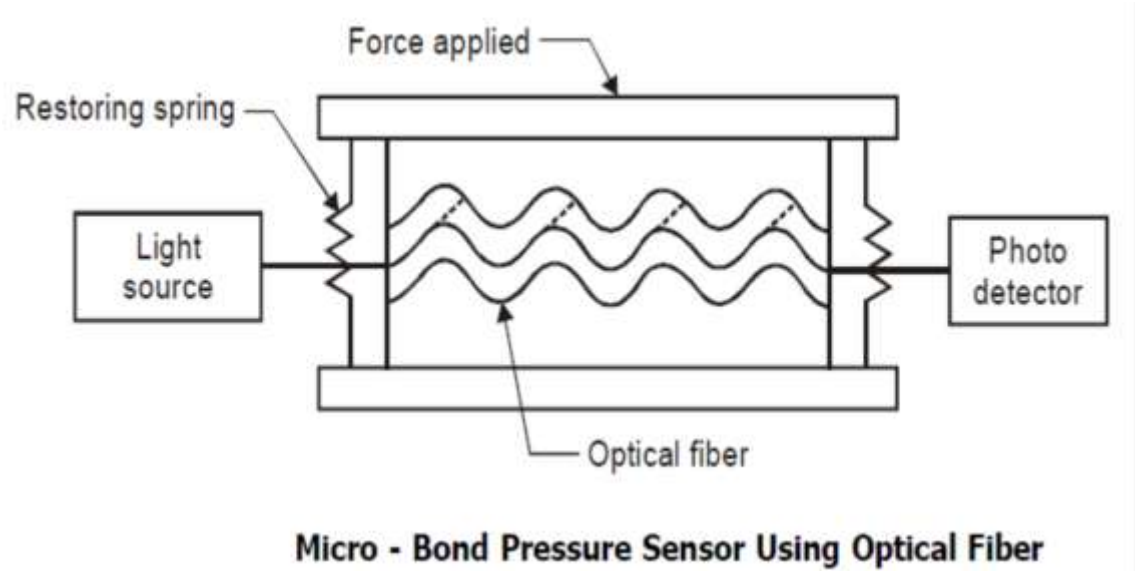

PRESSURE SENSOR

A pressure scissor is a device for pressure measurement of gases or liquids.

Pressure is an expression of the force required to stop this from expanding and is usually stated in terms of force per unit area.

A pressure sensor usually acts as a transducer, it generates a signal as a section of the pressure imposed.

Pressure sensors are used for control and monitoring in those everyday applications.

Pressure sensors can also be used to indirectly measure the variables such as fluid gas flow, speed, water level and altitude.

Pressure sensors can alternatively be called pressure transducer pressure transmitters, pressure sensors pressure indicators barometers and manometers, among other names.

FLUID PRESSURE

Many of the devices used to monitor fluid pressure in industrial processes involve them itching of the elastic deformation of diaphragms, capsules, bellows and tubes.

Types of pressure measurements

1. Absolute pressure where the pressure is measured relative to zero pressure, ie. a vacuum,
2. Differential pressure where a pressure difference is measured and
3. Gauge pressure where the pressure is measured relative to the barometric pressure.

1.DIAPHRAGMS

when there is a difference in pressure between the two sides then the centre of the diaphragm becomes displaced.

Corrugations in the diaphragm result in a greater sensitivity.

This movement can be monitored by some form of displacement sensor, eg. strain gauge, as illustrated in Figure.

A specially designed strain gauge is often used, consisting of four strain gauges with two measuring the strain in a circumferential direction while two measure strain in a radial direction.

The four strain gauges are then connected to form the arms of a Wheat stone bridge.

While strain gauges can be stuck on a diaphragm, an alternative is to create a silicon diaphragm with the strain gauges as specially doped areas of the diaphragm.

Such an arrangement is used with the electronic systems for cars to monitor the inlet manifold pressure.

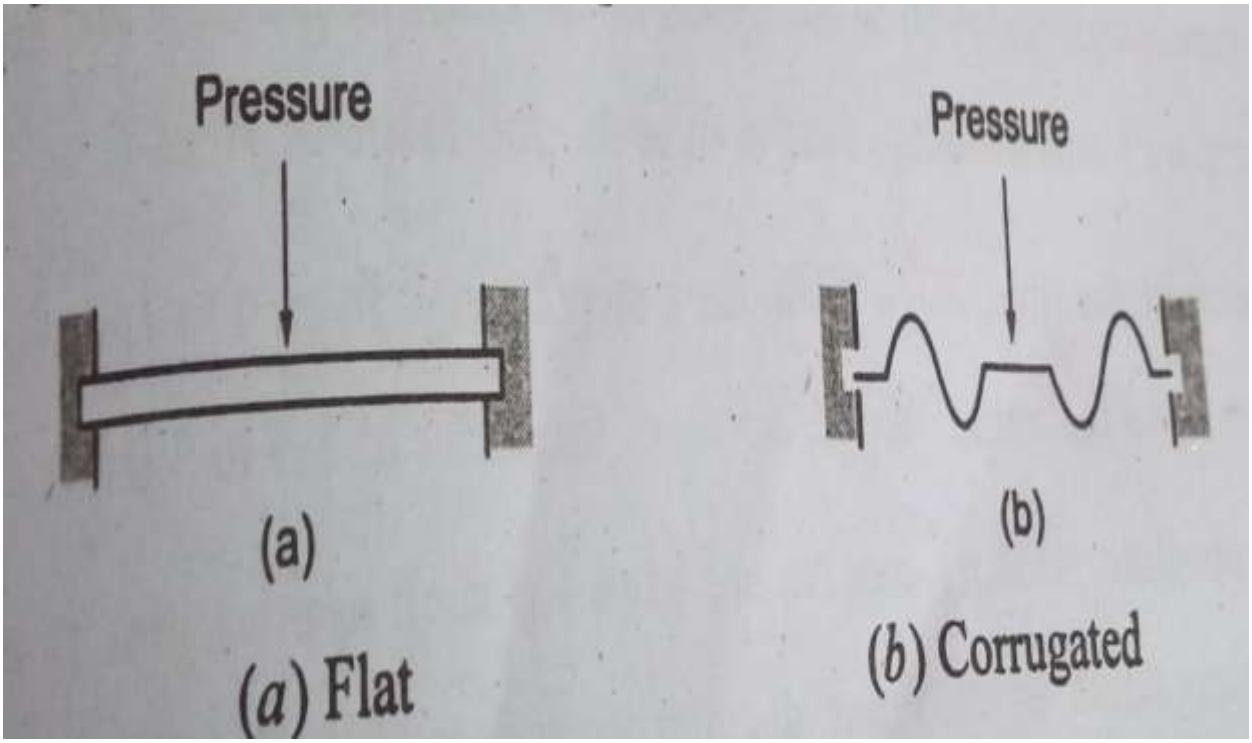

With the Motorola MPX pressure sensor, the strain gauge elements integrated, together with a resistive network, in a single silicon diaphragm chip.

When a current is passed through the strain gauge element and applied at right angles to it, a voltage is produced.

This element, together with signal conditioning and temperature compensation circuitry, is packaged as the MPX sensor. The output voltage is directly proportional to the pressure.

Such sensors are available for use for the measurement of absolute pressure (the MX numbering system ends with A, AP, AS or ASX), differential pressure (MX numbering system ends with D or DP) and gauge pressure (the MX numbering system ends with GP, GVP, GS, GVS, GSV or GVSX).

For example, the MPX2100 series has a pressure range of 100 kPa and supply voltage of 16 V d.c. gives in the absolute pressure and differential pressure forms a voltage output over the full range of 40 mV.

The response time, 10 to 90%, for a step change from 0 to 100 kPa is about 1.0 ms and the output impedance is of the order of 1.4 to 3.0 kV.

The absolute pressure sensors are used for such applications as altimeter and barometers, the differential pressure sensor for air flow measurement and the gauge pressure sensors for engine pressure and tyre pressure.

2.CAPSULE PRESSURE GAUGE

Capsule element pressure gauges are used to measure air and dry gases at low pressure.

They cover measuring spans from 2.5 mbar to 600 mbar. The measuring element consists of two metal diaphragms soldered together to form a cylindrical bellows chamber.

This capsule element expands when the pressure inside the element ls higher than the external pressure, and it contracts when the internal pressure is lower

This motion is proportional to the pressure to be measured, and it is coupled to the pointer mechanism.

Capsule pressure gauge working principle
The sensing clement of a capsule pressure gauge consists of two corrugated diaphragms welded together at their periphery to form a capsule.

The pressure to be measured is introduced into the capsule via an opening in the centre of the first diaphragm.

The centre of the second diaphragm is connected to the transmission mechanism so that the deflection of the measuring clement can be transmitted to the pointer.

When the pressure rises inside the capsule, both diaphragms will slightly deform. By making use of two diaphragms, the total deflection of the measuring element is twice as large.

In the pressure gauge, the pressure is going in and out the capsule, turning the pointer to the right and back to the left.

3.BELLOWS PRESSURE SENSOR

The bellows pressure sensor is made of a sealed chamber that has multiple ridges like the pleats of an accordion that are compressed slightly when the sensor is manufactured.

When pressure is applied to the chamber, the chamber will try to expand and open the pleats.

It uses a spring to oppose the movement of the bellows d provides a means to adjust the amount of travel the chamber will be when pressure is applied.

In low-pressure bellows sensors, the spring is not required.

The veld the bellows can be converted to linear motion so that a switch can be activated, or it can be connected to a potentiometer. This type of sensor is used in low-pressure applications usually less than 30 psi. The bellows sensor is also used to make a differential pressure sensor.

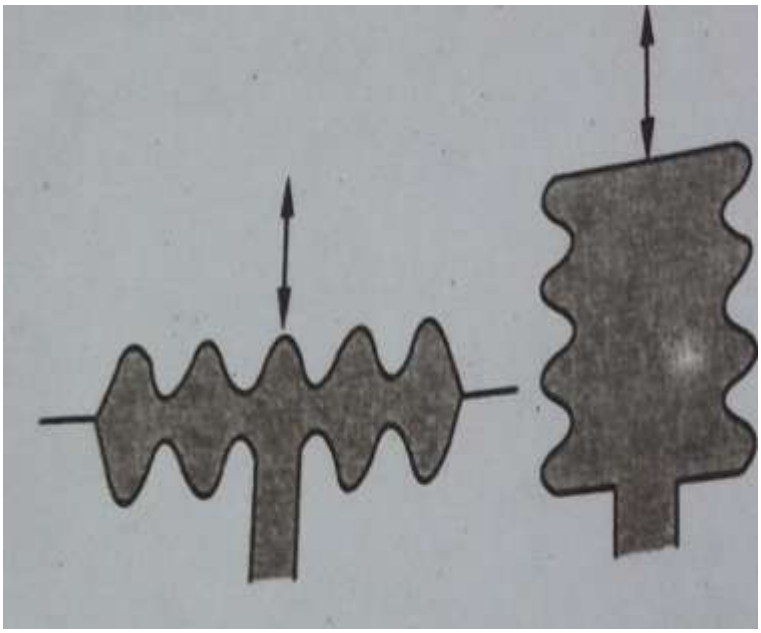

BELLOWS PRESSURE SENSOR PRINCIPLE WORKING

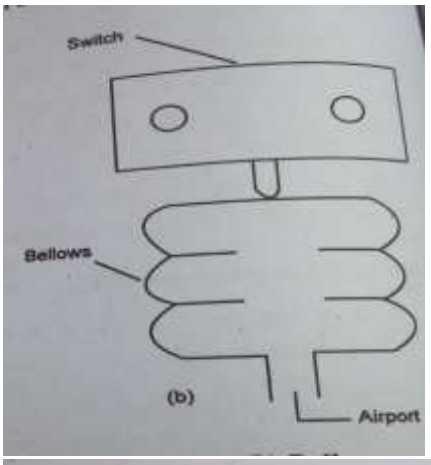

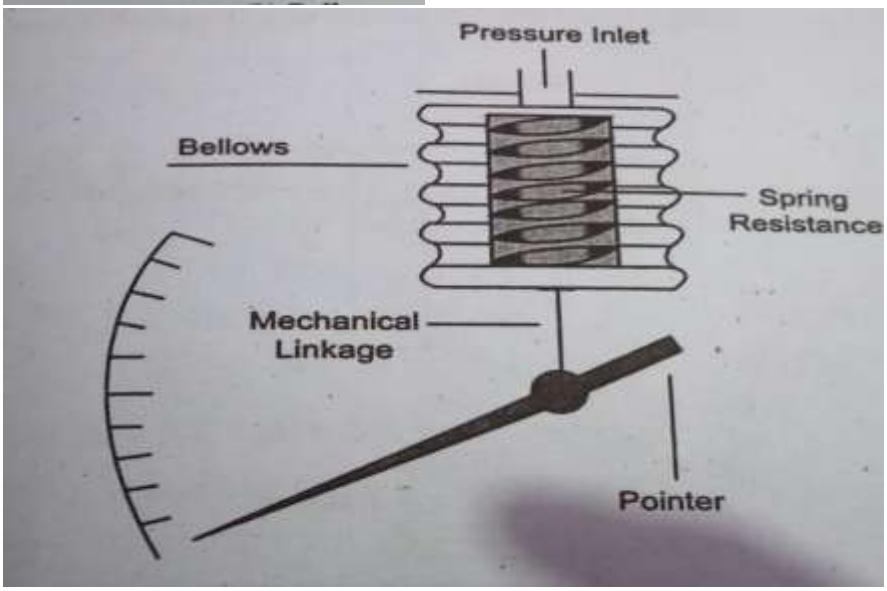

It is necessary to construct the bellows such that all of the travel occurs on the compression side of the point of equilibrium.

Therefore, in practice, the bellows must always be opposed by a spring, and the deflection characteristics force of the spring and bellows.

Phosphor Bronze, Brass, Beryllium Copper, Stainless Steel are normally used as the materials for bellows.

Bellows are manufactured either by

(1) Turning from a solid block of metal, or

(2) Soldering or welding stamped annular rings, or

(3) Rolling (pressing) a tube,

4.TUBE PRESSURE SENSOR

A different form of deformation is obtained wing n tube with a elliptical cross-section.

Increasing the pressure in such a tube causes it to tend to a more circular cross-section.

When such a tube is in the form of a C-shaped tube, this being generally known as a Bourdon tube, the C opens up to some extent when the pressure in the tube increases.

A helical form of such a tube gives a greater sensitivity,

The tubes are made from such materials as stainless steel and phosphor bronze and are used for pressure in the range 103 to 108 Pa

4.TUBE PRESSURE SENSOR

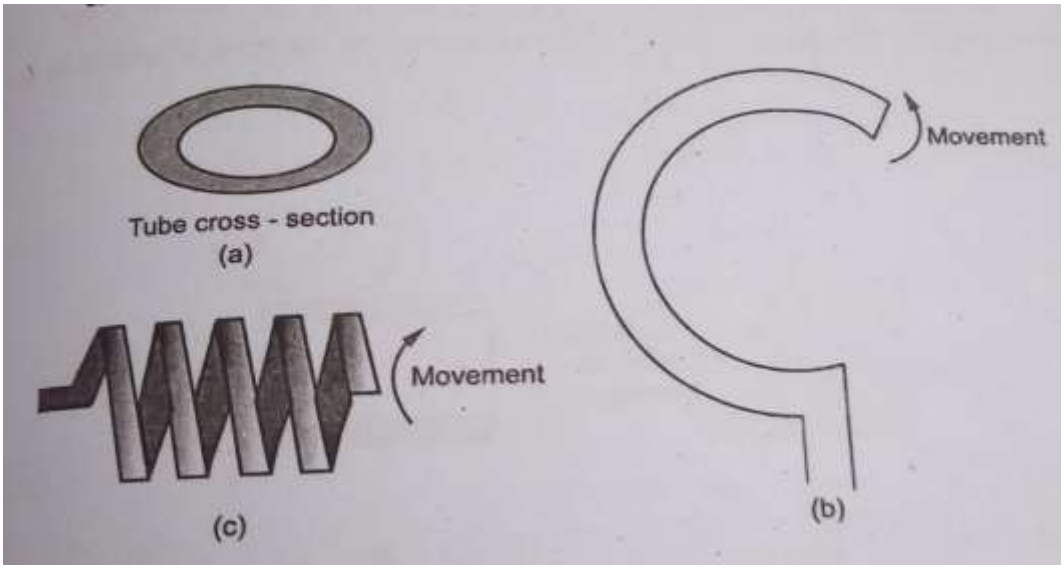

5.PIEZOELECTRIC SENSORS

Piezoelectric materials when stretched or compressed generate electric charge with one face of the material becoming positively charged and the opposite face negatively charged.

As a result, a voltage is produced.

Piezoelectric materials are ionic crystals, which stretched or compressed result in the charge distribution in the crystal changing at there is a net displacement of charge with one face of the material becoming positively charged and the other negatively charged.

The net charge q on a surface is proportional to the amount x by which the charges have been displaced, and since the displacement is proportional to the applied F:

$q=kx =SF$

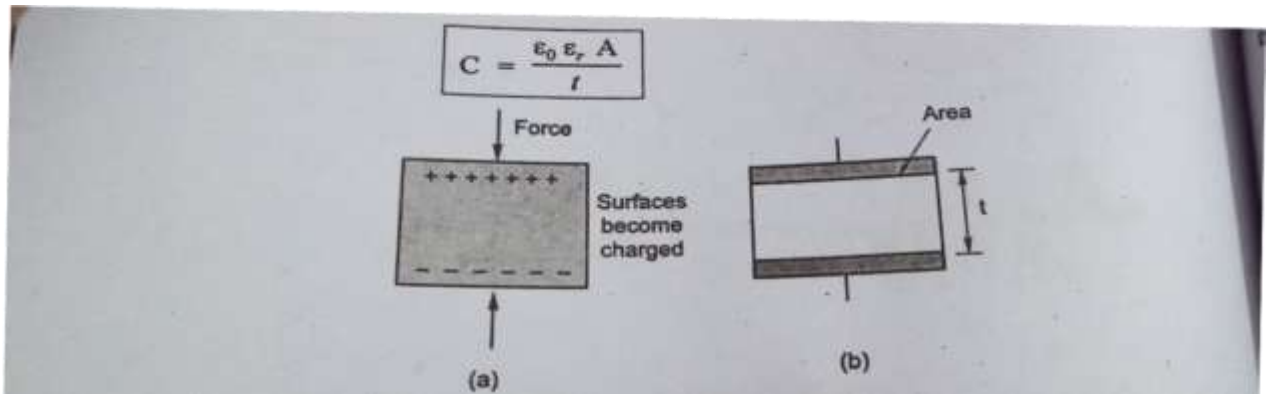

6.TACTILE SENSOR

A tactile sensor is a particular form of pressure sensor.

Such a sensor is used on the 'fingertips' of robotic 'hands' to determine when a hand has come into contact with an object.

They are also used for 'touch display measures where a physical contact has to be sensed.

A tactile sensor is a device. It measures the coming information in response to the physical interaction with the environment.

The sense of touch in humans is generally modeled, i.e. cutaneous sense and the kinesthetic sense.

Types of Tactile Sensors

1. Force/Torque Sensor

Force / torque sensors are used in combination with a tactile array to information for force control.

This type of sensors can sense load anywhere like the distal link of a manipulator and in constrains as a skin sensor.

The skin sensor generally provides more accurate force measurement at higher bowl manipulator link is defined generally, and the signal point contact is the force torque sensor can give the information about the contact location of and moments- it is called as an intrinsic tactile sensing.

2. Dynamic Sensor

Dynamic sensors are smaller accelerometers at the finger strips or at the robotic finger. The general function like pacinian corpuscles in his have equally large respective field;

Thus one or two skins accelerometer are for entire finger. These sensors effectively detect the making and breaking of the vibrations linked with the sliding over textured surfaces.

3. Thermal Sensor

Thermal sensors are important to the human ability to identify the materials of the objects made, but some are used in the robotics as well. The thermal sensing in die detecting thermal gradients in the skin, which are correspondent to both temperature and the thermal conductivity of an object.

TEMPERATURE SENSORS

Temperature sensors are vital to a variety of everyday products.

For example, household ovens, refrigerators, and thermostats all rely on temperature maintenance and control in order to function properly.

Temperature control also has applications in chemical engineering Examples of this include maintaining the temperature of a chemical reactor at the ideal set-point, monitoring the temperature of a possible runaway reaction to ensure the safety of employees, and maintaining the temperature of streams released to the environment to minimize harmful environmental impact.

While temperature is generally sensed by humans as "hot", "neutral", "cold", chemical engineering requires precise, quantitative measurements of temperature in order to accurately control a process,

This is achieved through the use of temperature sensors, and temperature regulators which process the signals they receive from sensors

From a thermodynamic perspective, temperature changes as a function of the average energy of molecular movement.

As heat is added to a system, molecular motion increases and the system experiences an increase in temperature. It is difficult, however, to directly measure the energy of molecular movement, so temperature sensors are generally property which changes in response to temperature.

The devices are then calibrated to traditional temperature scales using a Standard (ie the boiling point of water at known pressure).

TYPES OF TEMPERATURE SENSORS

1. Contact sensors:

Contact temperature sensors measure the temperature of the object to which the sensor is in contact by assuming or knowing that the two (sensor and the object) are in thermal equilibrium, in other words, there is no heat flow between them.

Examples:

Thermocouples

Resistance Temperature Detectors (RTDs)

Full System Thermometers

Bimetallic Thermometer

2. Noncontact sensors

Most commercial and scientific noncontact temperature sensors measure the thermal radiant power of the Infrared or Optical radiation received from a known or calculated area on its surface or volume within it.

An example of non contact temperature sensors is a pyrometer, which described into further detail at the bottom of this section.

THERMOMETERS

Thermometers are the most common temperature sensors encountered in simple, everyday measurements of temperature.

Two examples of thermometers are the

(i) Filled System and

(ii) Bimetal thermometers.

Filled System Thermometer

The familiar liquid thermometer consists of a liquid enclosed in a tube. The volume of the fluid changes as a function of temperature.

Increased molecular movement with increasing temperature causes the fluid to expand and move along calibrated markings on the side of the tube.

The guide should have a relatively Iarge thermal expansion coefficient so that small changes in temperature will result in detectable changes in volume.

A common tube material is glass and a common fluid is alcohol.

Mercury used to be a more common fluid until its toxicity was realized.

Although the filled-system thermometer is the simplest and cheapest way to measure temperature, its accuracy is limited by the calibration marks along the tube length.

Because filled system thermometers are read visually and don't electrical signals, it is difficult to implement them in process control rely heavily on electrical and computerized control

Bimetal Thermometer

In the bimetal thermometer. two metals (commonly steel and copper) with different thermal expansion coefficients.

As the temperature of the strip increases, the metal with the higher thermal expansion coefficients expands to a higher degree, causing stress in the materials and a deflection in the strip.

The amount of this deflection is a function of temperature,

The temperature ranges for which these thermometers can be used limited by the range over which the metals have significantly different thermal expansion coefficient.

Bimetallic strips are often wound into coils and placed in thermostats.

The moving end of the strip is an electrical contact, which transmits the temperature thermostat.

RESISTANCE TEMPERATURE DETECTORS (RTD)

A second commonly used temperature sensor is the resistance temperature detector (RTD, also known as resistance thermometer).

Unlike filled system thermometers, the RTD provides an electrical means of temperature measurement, thus making it more convenient for use with a computerized system

A RTD utilizes the relationship between electrical resistance and temperature, which may either be linear or nonlinear.

RTD are traditionally used for their high accuracy and precision.

However,at high temperatures above 700°C) they become very inaccurate due to degradation of the outer sheath, which contains the thermometer

A Therefore, RTD image is preferred at lower temperature range, where they are the most accurate.

Two main types of RTD:
1. The traditional RTD and

2. The thermistor

Traditional RTDs use metallic sensing elements that result in a linear relationship between temperature and resistance. As the temperature of the metal Increases, Increased random molecular movement impedes the flow of electrons. The increased resistance is measured as a reduced current through the metal for a fixed voltage applied.

The thermistor uses a semiconductor sensor, which gives a power function relationship between temperature and resistance.

The resistance sensor itself is responsible for the temperature measurement, as shown in the diagram. Sensors are most commonly composed of metals, such as platinum, nickel, or copper.

The material chosen for the sensor determines the range of temperature which the RTD could be used.

For example, platinum sensors, the most common type of resistor, range of approximately 200°C – 800°C. (A sample of the temperature ranges and resistance for the most common resistor metals is sons Table 4.2). Connected to the sensor are two insulated connection le These leads continue to complete the resistor circuit.

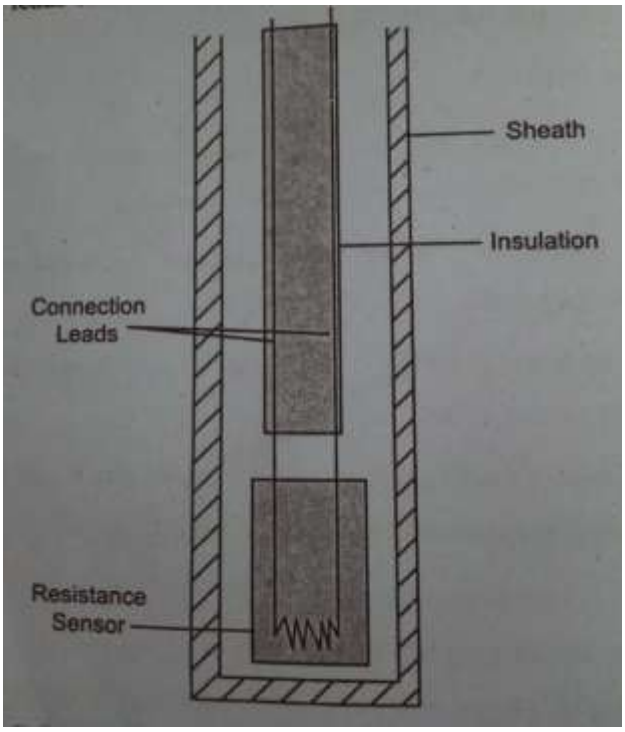

4 major categories of RTD sensors

1. Carbon resistors

2. Flim thermometers

3. Wire-wound thermometers

4. Coil elements

Carbon resistors are the most commonly used.

Coil elements are similar wire-wound thermometers and have generally replaced them in all industrial applications.

RTD Operation:

Most traditional RTD operation is based upon a linear relationship between resistance and temperature, where the resistance increases with temperature.

For this reason, most RTDs are made of platinum, which is linear over greater range of temperatures and is resistant to corrosion.

However, when determining a resistor material, factors such as temperature range, temperature sensitivity, response time, and durability should all be taken into consideration.

Different materials have different ranges for each of these characteristics

The principle behind RTDs is based upon the Callendar - Van Dusen equation shown below, which relates the electrical resistance temperature in C.

Another type of RTD is the thermistor, which operates based upon exponential relationship between electrical resistance and temperature

THERMOCOUPLES

Another temperature sensor often used in industry is the thermocouple.

Among the various temperature sensors available, the thermoCouple is the most widely used sensor. Similar to the RTD, the thermocouple provides an electrical measurement of temperature.

The main principle upon which the thermocouple function is based on is the difference in the conductivities of the two wire materials that the thermocouple is made of, at a given temperature.

This conductivity difference increases at higher temperatures and conversely, the conductivity difference decreases at lower temperatures. This disparity results in the thermocouples being more efficient and useful at higher temperatures.

Since the conductivity difference is small at lower temperatures and thus more difficult to detect, they are inefficient and highly unreliable at low temperatures

The conductivity difference between the two wires, along with a temperature difference between the two junctions, creates an electrical current that flows through the thermocouple.

The first junction point, which is the point at which the two wires are connected, is placed within the medium whose temperature is being measured.

The second junction point is constantly held at known reference temperature.

When the temperature of the medium differs from the reference temperature, a current flows through the circuit.

The strength of this current is based upon the temperature of the medium the reference temperature, and the materials of the metal wires.

Since the reference temperature and materials are known, the temperature of the medium can be determined from the current strength.

Error associated with the thermocouple occurs at lower temperatures due to the difficulty in detecting a difference in conductivities.

Therefore, thermocouples are more commonly used at higher temperatures (above -125 C) because it is easier to detect differences in conductivities, Thermocouples are operable over a wide range of temperatures, from 200°C to 2320°C, which indicates its robustness and vast applications.

Shematic diagram of how the thermocouple function

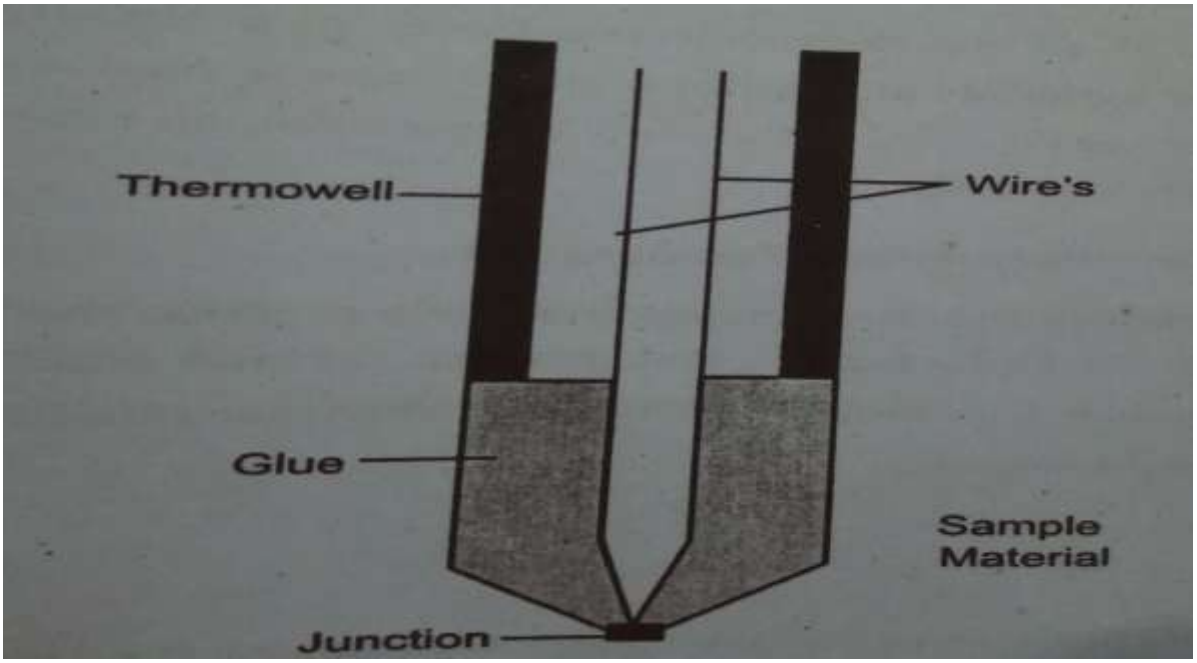

Laws for Thermocouples

Law of Homogenous Material

If all the wires and the thermocouple are made of the same material temperature changes in the wiring do not affect the output voltage. Thu need different materials to adequately reflect the temperature.

Law of Intermediate Materials

The sum of all the thermoelectric forces in a circuit with a number dissimilar materials at a uniform temperature is zero, This implies that third material is added at the same temperature, no net voltage is generated by the new material.

Law of Successive or Intermediate Temperature

If two dissimilar homogeneous materials produce thermal emf when junctions are at T and T, and produce thermal emf2 when the junction are at and T,, the emf generated when the junctions are at T1 and T2 will be emfl + emf2.

Application
1.Steel Industry

Monitor temperature and chemistry throughout the steel making process

2. Heating Appliance Safety

Thermocouples in fail-safe mode are used in ovens and water heaters detect if pilot flame is burning to prevent fire and health hazard

3. Manufacturing

Used for testing prototype electrical and mechanical apparatus

PYROMETERS

Pyrometers (non-contact Temperature sensors) measures the amount of heat radiated, rather than the amount of heat conducted and convected to the sensor.

Various types of pyrometers, such as total radiation and photoelectric pyrometers, exist.

Pyrometers differ in the type of radiation they measure .

There are many factors that influence the amount of radiated heat detected, thus there number are many assumptions that must be made regarding the emissivity, or the measure of the manner in which heat is radiated, of the object.

These assumptions are based upon the manner in which heat is radiated as well as the geometry of the object.

Because temperature is dependent on the emissivity of a body, these assumptions regarding the emissivity introduce uncertainties and inaccuracies in the temperature readings.

Therefore, because of the error associated with them, pyrometers are not often used in industry.

Optical Pyrometer

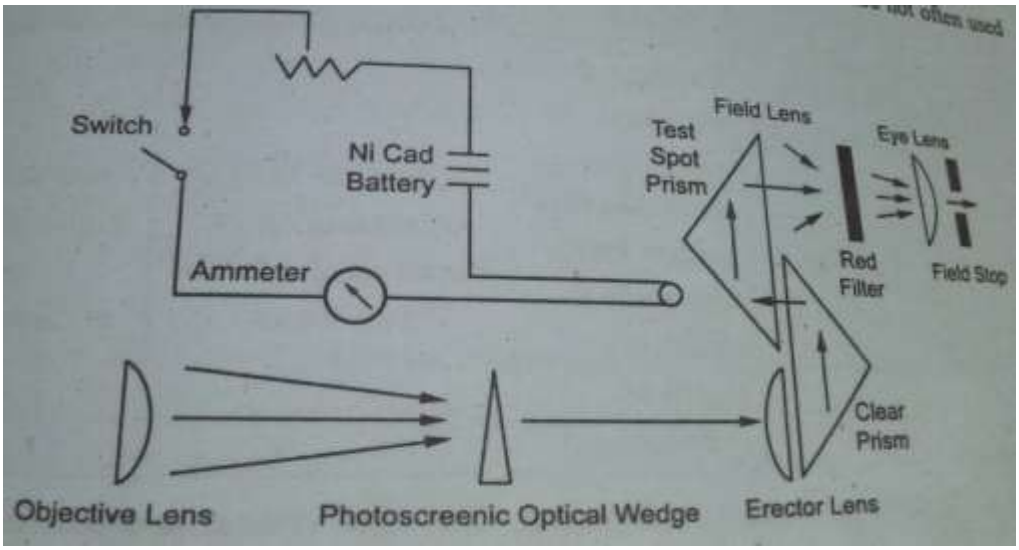

How Optical Pyrometers Work

Compares the color of visible light given off by the object with that of a electrically heated wire

The wire can be preset to a certain temperature.The wire can be manually adjusted to compare the two objects.

How Radiation Pyrometers Work

This sensor works by measuring the radiation (infrared or visible light) that an object gives off

The radiation heats a thermocouple in the pyrometer which in turn induces a current

The larger the current induced, the higher the temperature is Pyrometers are usually used at very high temperatures, but can be used at colder temperature as well.

There are lots of industrial applications to pyrometers. Plant operators can use pyrometers to get a sense of what temperature certain processes are running at.

The downside to pyrometers is that they are not very accurate as thermocouples or RTD sensors are.

This is because they rely on quantifying colors of light.

TEMPERATURE REGULATORS

Temperature regulators, also known as temperature control valves (TCVs), physically control, as well as measure, temperature.

Temperature regulators are not capable of directly maintaining a set value; instead, they relate the load (in this case de valve opening) with the control (temperature measurement).

These regulators are Best useful when temperature is correlated to a flow of a substance.

For example, a TCV may be used to control the temperature of an exothermic reaction that requires constant cooling.

The TCV measures the temperature of the reaction and, based upon s temperature, either increases or decreases the flow rate of cooling fluid to adjust the temperature of the reaction.

Similarly, the regulator could be used to adjust the w amount of steam, which is typically used to heat a substance.

Therefore, by adjusting flow rate, the regulator can indirectly adjust temperature of a given medium.

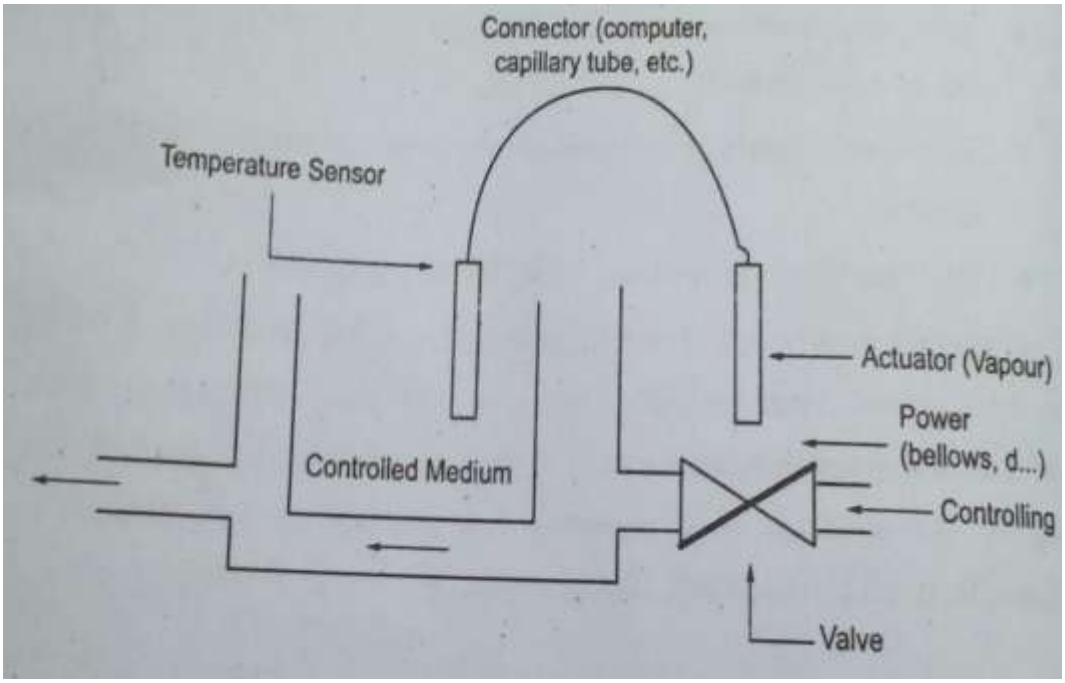

Regulator Operation:

The temperature regulator operates based upon a mechanical means of temperature control.

As previously mentioned, the bulb of the regulator is typically filled with a heat conducting substance.

Due to the thermal expansion properties of this substance, the substance expands as the temperature increases.

This expansion causes a change in the pressure of the actuator, which correlates to the temperature of the medium.

This pressure change repositions a valve on the regulator, which controls the flow rate of a coolant.

The temperature of the medium is then altered by the change in the flowrate of this coolant.

Temperature Detecting Elements

Most temperature regulation systems use thermocouples or RTD as temperature sensing devices.

For these systems, the connector is a computer The sensors send an electric signal to the computer, which calculates the temperature.

The computer then compares the temperature measured by the sensor a programmed set-point temperature, thus determining the required pressure m a actuator.

The pressure in the actuator changes position of the power source (diaphragm or bellows), which consequently changes the flow rate through the valve.

Some temperature regulation systems use a filled bulb as a temperature sensor.

Temperature Detector Placement

Temperature detection can be done with internal or remote elements.

For internal temperature detectors, the thermal actuator and temperature detector are located entirely within the valve.

For remote temperature detectors, the primary temperature detecting element is separate from the actuator and valve, and is connected to actuator with either electrical wiring or capillary tubing, depending on Mechanism of the temperature sensor.

Remote temperature detectors are Common, as internal temperature detectors are limited in use. Internal temperature

Actuator Type: Thermal Systems

There are four main categories of thermal actuators used in temperature regulators.

Thermal actuators produce power and work, proportional to the measured temperature of the process, on the power source.

Actuator types include the vapor. filled system, the liquid-filled system, the hot chamber system, and the fusion-type or wax-filled system.

Of all the thermal systems mentioned, liquid-filled systems are the most common, because they relate temperature and pressure change in a linear fashion. * the vapor-filled system, the thermal actuator is partially filled with a volatile liquid. As the temperature of the sensor increases, the vapor pressure of the liquid.

Vapor-Filled Systems

This increases the pressure on the power source, and adjusts the flow rate through the valve.

Liquid-Filled Systems

In liquid-filled systems, the thermal actuator is filled with a chemically stable liquid, such as a hydrocarbon. As the temperature increases, the liquid expands which produces a force on the power source.

Hot Chamber Systems

In hot chamber systems, the thermal actuator is partially filled with a volatile fluid. An increase in temperature of the system forces some of this fluid into power unit, where the heat of the unit causes this liquid to turn into a superheat vapor. The pressure increase produces a force on the power source.

Fusion-Type (Wax-Filled) Systems

Of all the systems mentioned, the fusion-type system is the least common. In fusion-type system, the thermal actuator is filled with special waxes such as hydrocarbons, silicones, and natural waxes.

THERMISTOR

As the name implies, the thermistor (ie, thermal resistor) is temperature-sensing device whose resistance is a function of temperature.

A thermistor (or thermal resistor) is defined as a type of resistor who electrical resistance varies with changes in temperature.

Although resistors; resistance will fluctuate slightly with temperature, a thermistor particularly sensitive to temperature changes.

Thermistors are available in two types: PTC (positive temperature coefficient) and Negative temperature coefficient.

The resistance of a PTC thermistor increases as the temperature increases.

In contrast, the resistance of an NTC thermistor decreases as temperature increases, and this type seems to be the most commonly used thermistor.

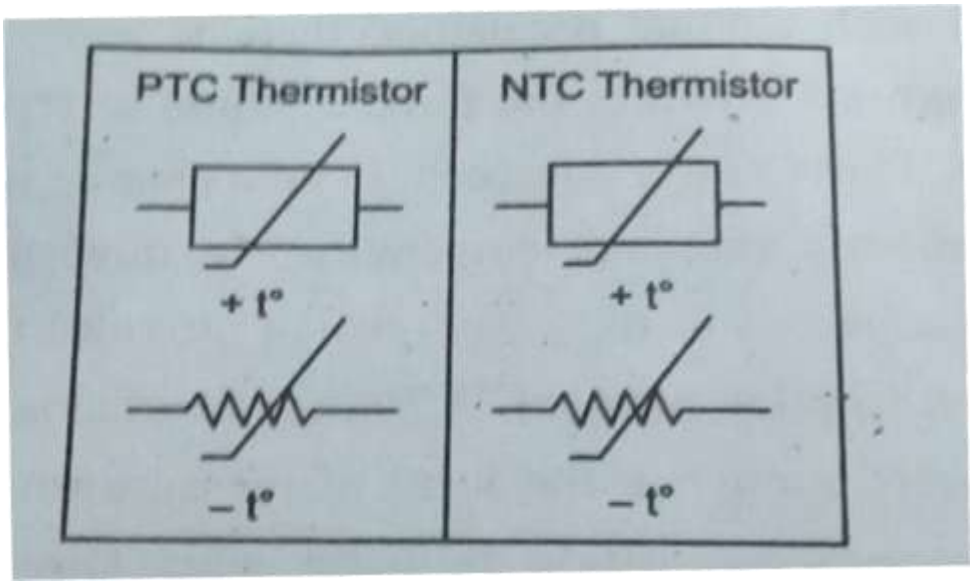

Uses of Thermistors

Thermistors have a variety of applications. They are widely used as a way to measure temperature as a thermistor thermometer in many different liquid and ambient air environments.

Some of the most common uses of thermistors include:

Digital thermometers (thermostats)

Automotive applications to measure oil and coolant temperatures in cars & trucks)

Household appliances (like microwave, fridges, and ovens)

Circuit protection

Rechargeable batteries (ensure the correct battery temperature is maintained)

Working principle of a thermistor

The working principle of a thermistor is that its resistance is dependent on its temperature

We can measure the resistance of a thermistor using an ohmmeter.

If we know the exact relationship between how changes in the temperature will affect the resistance of the thermistor - then by measuring the thermistor resistance we can derive its temperature.

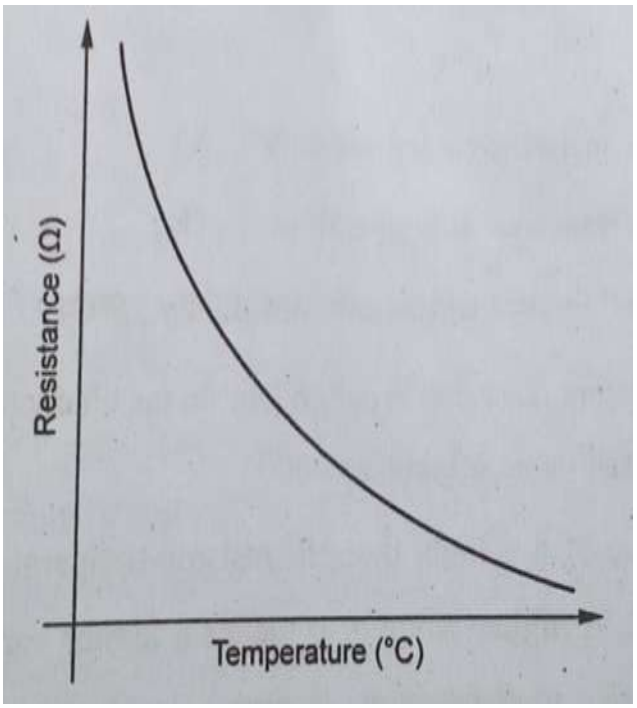

Two types of thermistors

NTC Thermistor

In an NTC thermistor, when the temperature increases, resistance decreases. And when temperature decreases, resistance increases. Hence in an NTC thermistor temperature and resistance are inversely proportional. These are the most common type of thermistor.

Above we can clearly see that the α has a negative sign.

This negative sign indicates the negative resistance temperature characteristics of the NTC thermistor

If β= 4000 K and T = 298 K, then the α =0.0045°K.

This is much higher than the sensitivity of platinum RTD.

This would be able to measure the very small changes in the temperature.

PTC Thermistor

A PTC thermistor has the reverse relationship between temperature and resistance. When temperature increases, the resistance increases.

And when temperature decreases, resistance decreases. Hence in a PTC thermistor temperature and resistance are inversely proportional.

Although PTC thermistors are not as common as NTC thermistors, they are frequently used as a form of circuit protection. Similar to the function of fuses, PTC thermistors can act as current-limiting device.

When current passes through a device it will cause a small amount o resistive heating. If the current is large enough generate more heat the device can lose to its surroundings then the device heats up.

In a PTC thermistor, this heating up will also cause its resistance increase. This creates a self-reinforcing effect that drives the resistance upwards, therefore limiting the current.

In this way, it acts as a current limiting device - protecting the circuit.

Thermistor Characteristics:

$$R_1 = R_2 e^{\beta\left(\frac{1}{T_1} - \frac{1}{T_2}\right)}$$

Thermistor Construction

To make thermistor, two more semiconductor powders made metallic oxides are mixed with binder form a slurry.

Small drops this slurry formed over lead wires.

For drying purpose, we have put into sintering furnace.

During this process, that slurry will shrink onto the lead wires make electrical connection.

This processed metallic oxide sealed by putting glass coating on it.

This glass coating gives waterproof property – helping to improve their stability.

There are different shapes and sizes of thermistors available in the market.

Smaller thermistors are the form of beads of diameter from 0.15 millimeters 1.5 millimeters.

Thermistors may also be the form of disks and washers made pressing the thermistor material under high pressure into flat cylindrical shapes with diameter from millimeters 25 millimeters.

The typical size of thermistor 0.125mm 1.5 mm.

Commercially available thermistors have nominal values of IK, 2K, 10K, 20K, 100K, etc. This value indicates the resistance value at temperature of 25°C.

Advantages of thermistors:

The major advantages of thermistors are their small size and relatively low cost.

This size advantage means that the time constant of thermistors operated in sheaths is small, although the size reduction also decreases its heat dissipation capability and so makes the self-heating effect greater. This effect can permanently damage the thermistor.

To prevent this, thermistors have to be operated at low levels of electric current compared to resistance thermometer - resulting in lower measurement sensitivity.

Thermistor vs Thermocouple:

Thermistors:

A more narrow range of sensing (55 to +150°C – although depending on the brand)

Sensing parameters = Resistance

Nonlinear relationship between the sensing parameter (resistance) and temperature

NTC thermistors have a roughly exponential decrease in resistance with increasing temperature

Good for sensing small changes in temperature (it's hard to use a thermistor accurately and with high resolution over more than a 50°C range)

The sensing circuit is simple and doesn't need amplification & is very simple

Accuracy is usually hard to get better than 1°C without calibration

Thermocouples

Have a wide range of temperature sensing (Type T -200-350° C; Type J = 95 -760°C; Type K = 95 -1260°C; other types go to even higher temperatures)

Can be very accurate

Sensing parameter = voltage generated by junctions at different

temperatures

Thermocouple voltage is relatively low

Linear relationship between the sensing parameters (voltage) and temperature.

UNIT-V

SIGNAL CONDITIONING:

Amplification-Filtering-Sample and hold circuits-Data Acquisition:Single channel and multi channel data acquisition- Data logging-applications- Automobile, Aerospace, Home appliances, Manufacturing, Environmental monitoring.

The output signal from the sensor of a measurement system has generally to be processed in some way to make it suitable for the next stage of the operation.

The signal may be, for example, too small and have to be amplified, contain interference which has to be removed, be non-linear and require linearisation, be analogue and have to be made digital, be digital and have to be made analogue, be a resistance change and have to be made into a current change, be a voltage change and have to be made into a suitable size current change, etc.

All these changes can be referred to as signal conditioning.

For example, the output from a thermocouple is a small voltage, a few millivolts.

A signal conditioning module might then be used to convert this into a suitable size current signal, provide noise rejection, linearisation and cold junction compensation (i.e. compensating for the cold junction not being at 0°C).

SIGNAL CONDITIONING PROCESSES

1. Protection to prevent damage to the next element, e.g. a microprocessor, as a result of high current or voltage. Thus there can be series current limiting resistors, fuses to break if the current is too high, polarity protection and voltage limitation circuits.

2. Genting the signal into the right type of signal. This can mean making the signal into a dc voltage or current. Thus, for example, the resistance change of a strain gauge has to be converted into a voltage change. This can be done by the use of a Wheatstone bridge and using the out-of balance voltage. It can mean making the signal digital or analogue

3. Getting the level of the signal right. The signal from a thermocouple might be just a few millivolts. If the signal is to be fed into an analog to digital converter for inputting to a microprocessor then it needs to be made much larger, volts rather than millivolts. Operational amplifiers are widely used for amplification

4. Eliminating or reducing noise. For example, filters might be used to eliminate mains noise from a signal

5. Signal manipulation, eg, making it a linear function of some variable The signals from some sensors, eg a flow meter, are non-linear and thus a signal conditioner might be used so that the signal fed on to the next element is linear.

AMPLIFICATION

An amplifier can be considered to be essentially a system which has an input and an output, the voltage gain of the amplifier being the ratio of the output and input voltages when each is measured relative to the earth.

The input impedance of an amplifier is defined as the input voltage divided by the input current, the output impedance being the output voltage divided by the output current.

The basis of many signal conditioning modules is the operational amplifier.

The operational amplifier is a high-gain d.c. amplifier, the gain typically being of the order of 100 000 or more, that is supplied as an integrated circuit on a silicon chip.

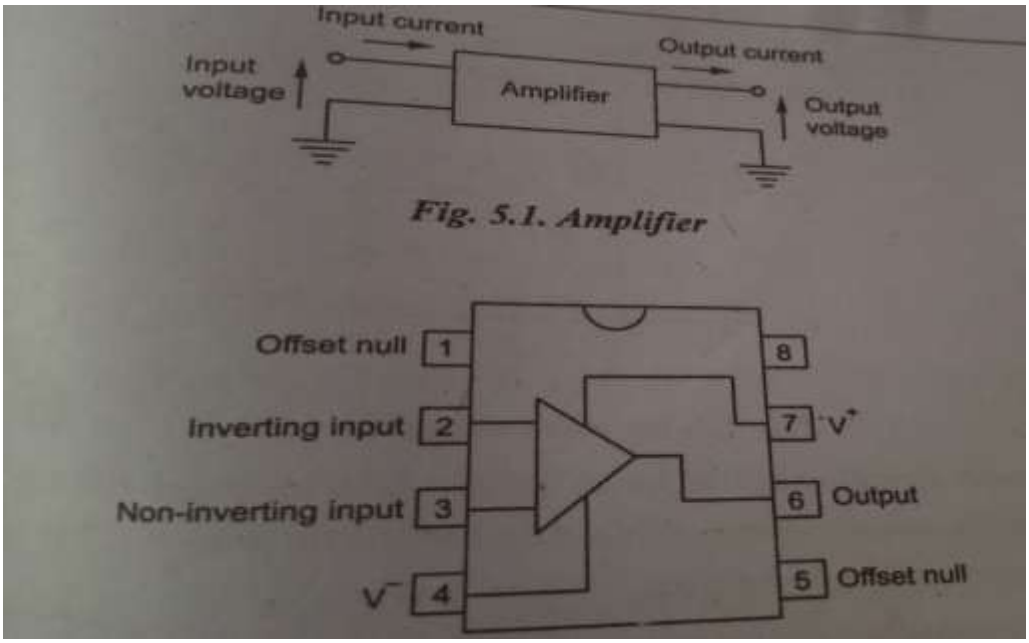

Fig. 5.1. Amplifier

Operational amplifier

It has two inputs, known as the inverting input (2) and the non-inverting input (1).

The output depends on the connections made to these inputs.

There are other inputs to the operational amplifier, namely a negative voltage supply, a positive voltage supply and two inputs termed offset null, these being to enable corrections to be made for the non-ideal behaviour of the amplifier.

An ideal model for an operational amplifier is as an amplifier with an infinite gain, infinite input impedance and zero output impedance, i.e, the output voltage is independent of the load.

INVERTING AMPLIFIER

The input is taken to the inverting input through a resistor R, with the non-inverting input being connected to ground.

A feedback path is provided from the output, via the resistor R, to the inverting input.

The operational amplifier has a voltage gain of about 100 000 and the change in output voltage is typically limited to about 10 V. The input voltage must then be between + 0.0001 and -0.0001 V.

This is virtually zero and so point X is at virtually earth potential.

Hence, for an ideal operational amplifier with an infinite gain, and hence V = 0, the input potential V, can be considered to be across R. Thus

$$V = I1\ R1$$

The operational amplifier has a very high impedance between its input terminals; for a 741 about 2 M2.

Thus virtually no current flows through X into it.

For an ideal operational amplifier the input impedance is taken to infinite and so there is no current flow through X. Hence the current be through R, must be the current through R.

The potential difference across R, is (Vx - Vout) and thus, since VX is zero for the ideal amplifier, potential difference across R, is – Vout.

Thus - Vout =I1R2

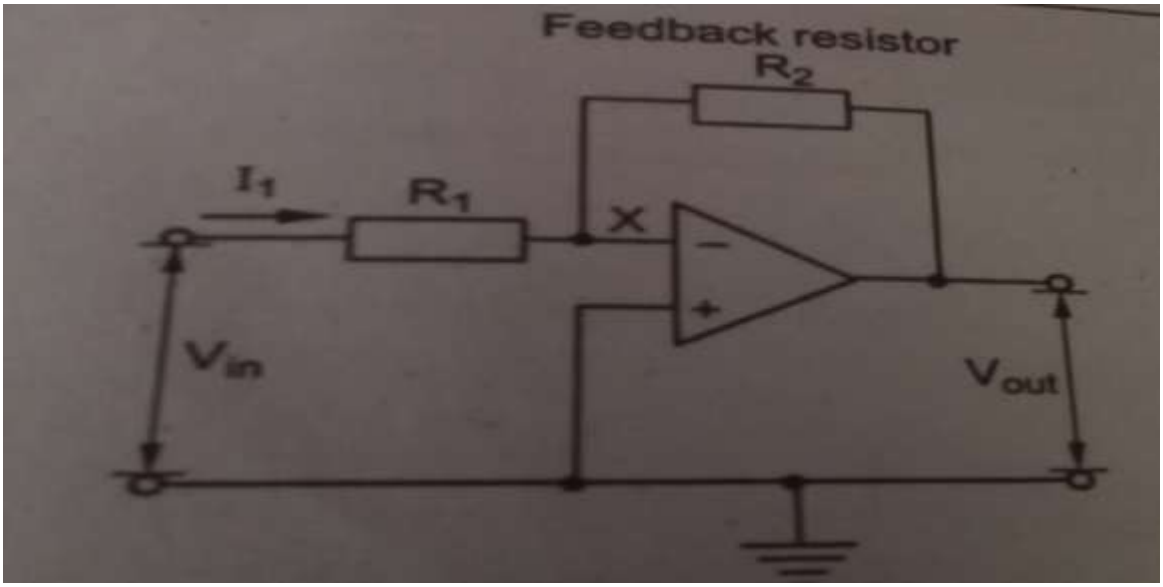

NON INVERTING AMPLIFIER

The input to the circuit to a large resistance, the input resistance typically being 2 MD.

The output resistance, i.e. the resistance between the output terminal and the ground line, is, however, much smaller, eg. 75 V.

Thus the resistance in the circuit that follows is a relatively small one and is less likely to load that circuit. Such an amplifier is referred to as a voltage follower,

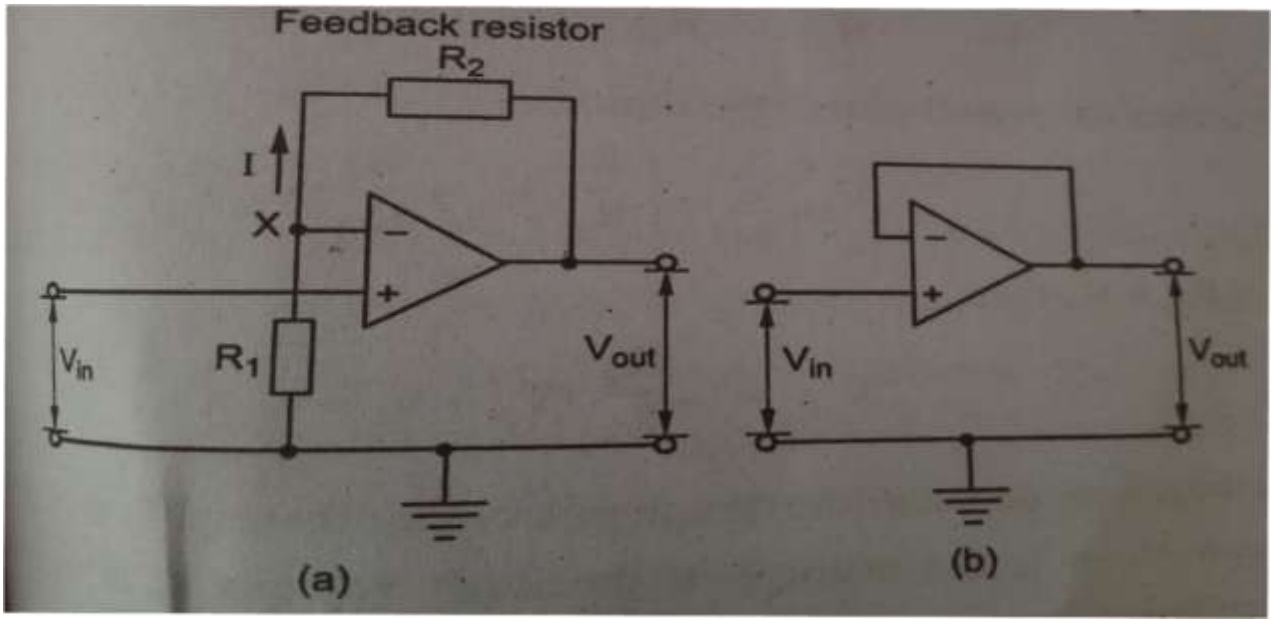

SUMMING AMPLIFIER:

As with the inverting amplifier (Section 3.2.1), X is a virtual earth. Thus the sum of the currents entering X must equal that leaving it. Hence

I=IA+IB+IC

But I = VA/ RA and Vc /Rc .

Also we must have the same current I passing through the feedback resistor. The potential difference across R, is (Vx - Vout). Hence, since V, can be assumed to be zero.

$$-\frac{V_{out}}{R_2} = \frac{V_A}{R_A} + \frac{V_B}{R_B} + \frac{V_C}{R_C}$$

The output is thus the scaled sum of the inputs, i.e.,

$$V_{out} = -\left(\frac{R_2}{R_A}V_A + \frac{R_2}{R_B}V_B + \frac{R_2}{R_C}V_C\right)$$

If $R_A = R_B = R_C = R_1$ then

$$V_{out} = -\frac{R_2}{R_1}(V_A + V_B + V_C)$$

FILTERING

The term filtering is used to describe the process of removing a certain band of frequencies from a signal and permitting others to be transmitted.

The range of frequencies passed by a filter is known as the pass band, the passing as the cut-off frequency.

Filters are classified according to the frequency ranges they transmit or reject

i) A low-pass filter has a pass band which allows all frequencies from zero up to some frequency to be transmitted.

ii) A high-pass filter has a pass band which allows all frequencies from some value up to infinity to be transmitted.

iii) A band-pass filter allows all the frequencies within specified band to be transmitted.

iv) A band-stop filter stops frequencies with all particular band from being transmitted.

In all cases the cut-off frequency is defined as being that at which output voltage is 70.7% of that in the pass band.

Attenuation:

The term attenuation is used for the ratio of input and output powers, this being written as the ratio of the logarithm of the ratio and so gives the attenuation in units of bels.

Since this is a rather large unit, decibels (dB) are used and then attenuation in dB -10 log (input power output power). Since the power through an impedance is proportional to the square of the voltage, the attenuation in dB - 20 log(input voltage/output voltage).

The output voltage of 70.7% of that in the pass band is thus an attenuation of 3 dB

Characteristics of ideal filters

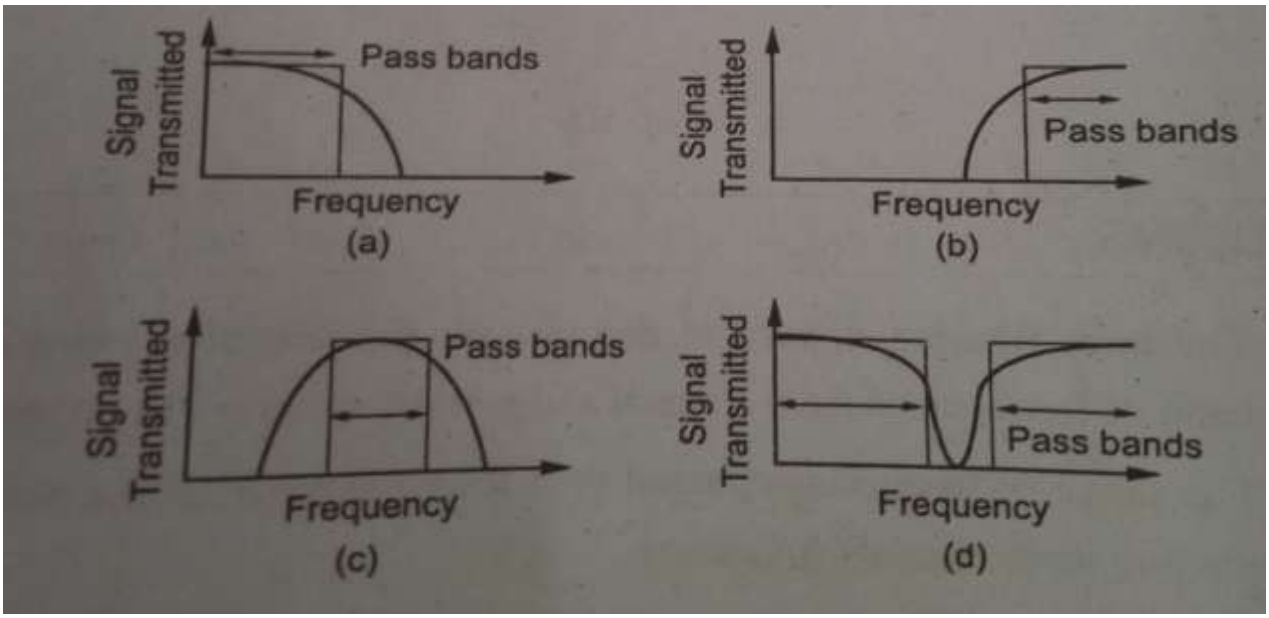

Types of Filters:

The term passive is used to describe a filter made up using only resistors, capacitors and inductors, the term active being used when the filter also involves an operational amplifier.

Passive filters have the disadvantage that the current that is drawn by the item that follows can change the frequency characteristic of the filter. This problem does not occur with an active filter.

Low-pass filters are very commonly used as part of signal conditioning. This is because most of the useful information being transmitted is low frequency.

Since noise tends to occur at higher frequencies, a low-pass filter can be used to block it off. Thus a low-pass filter might be selected with a cut-off

Passive and Active Filter

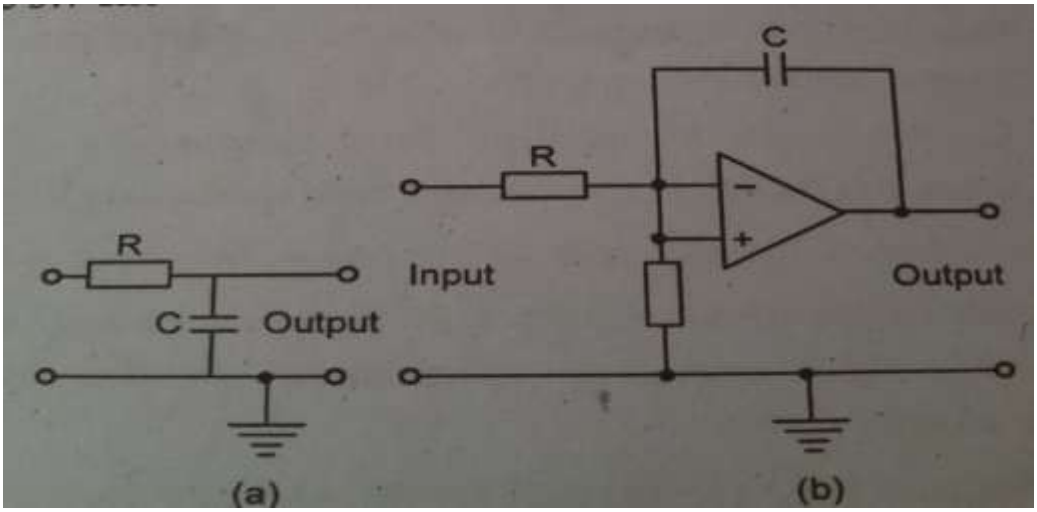

SAMPLE AND HOLD CIRCUITS

Sample-hold circuits are the devices that store analog information and reduce the aperture time of an AD converter.

A sample hold is simply a voltage-memory device voltage is acquired and then stored on a high-quality capacitor.

A1 is an input buffer amplifier with a high input impedance so that the source, which may be an analog multiplexer, is not loaded.

The output of A, must be capable of driving the hold capacitor with stability and enough drive current to charge it rapidly.

S1 is an electronic switch, generally an FET, which is rapidly switched on or off by a driver circuit that interfaces with TIL inputs.

C is a capacitor with low leakage and low dielectric absorption characteristics; it is a polystyrene, polycarbonate, polypropylene, or Teflon type

Two modes of operation

Sample-hold sample mode, when the switch is closed; and

Hold mode, when the switch is open

Sample-bolts are usually operated in one or two basic ways.

The device can continuously track the input signal and be switched into the hold mode only at certain specified times, spending most of the time in tracking mode

This is the case for a sample-hold employed as a deglitcher at the output of a D/A converter, for example.

Alternatively, the device can stay in the bold mode most of the time and go to the sample mode just to acquire a new input signal level. This is the case for a sample hold used in a data acquisition system following the multiplexer.

SAMPLE-HOLD AS A DATA-RECOVERY FILTER

A common application for sample-hold circuits is data-recovery, or signal reconstruction, filters.

The problem is to reconstruct a train of analog samples into the original signal; when used as a recovery filter, the sample-bold is known as zero order hold.

It is a useful filter because it fills in the space between samples, providing data smoothing

As with other filter circuits, the gain and phase components of the transfer function are of interest.

By an analysis based on the impulse response of a sample hold and use the Laplace transform, the transfer function is found to be:

Where, is the sampling frequency.

The sample-hold is therefore a low-pass filter with a cutoff frequency slightly less than f, 12 and a linear phase response that results in a constant delay time of T/2, where T is the time between samples. Notice that the gain function also has significant response lobes beyond fs.

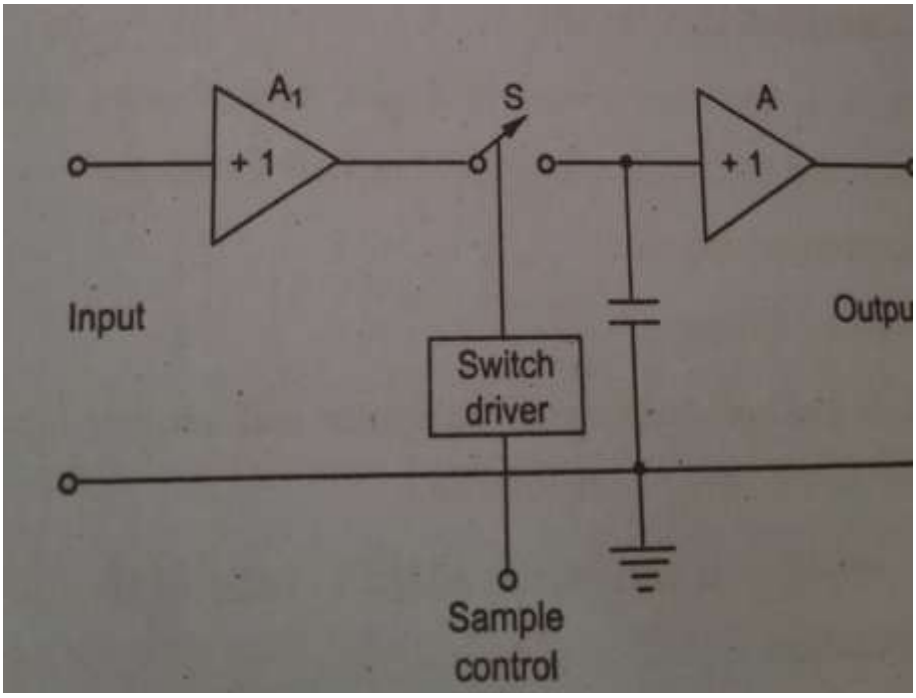

SAMPLE-HOLD CHARACTERISTICS:

A number of parameters are important in characterizing sample-hold performance. Probably most important of these is acquisition time.

The definition is similar to that of settling time for an amplifier.

It is the time required, after the sample-command is given, for the hold capacitor to change to a full-scale voltage charge and remain within a specified error band around final value.

SAMPLE-HOLD CHARACTERISTICS

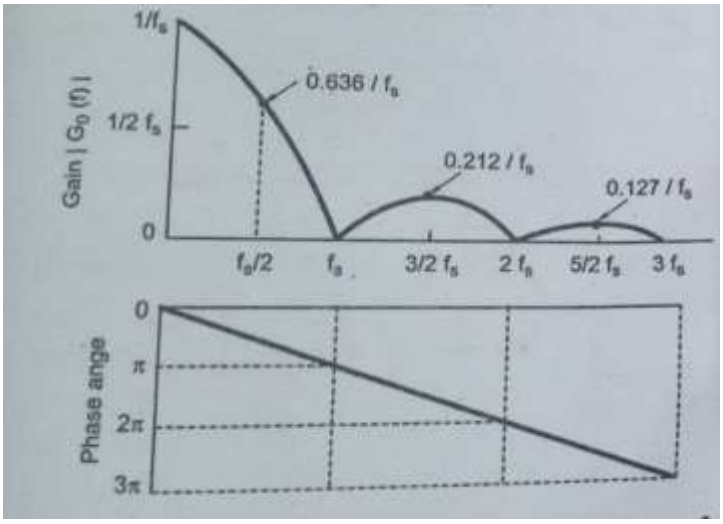

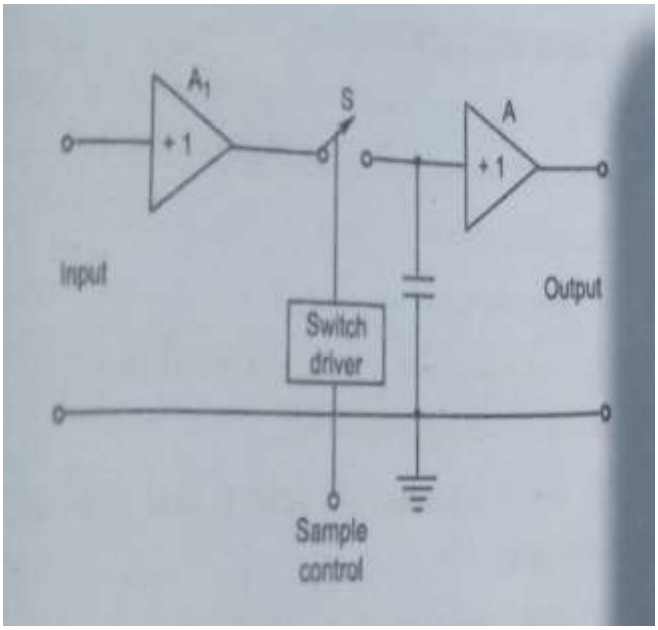

Hold-mode specifications:

1.Hold-mode droop is the output voltage change per unit time when the sample switch is open. This droop is caused by the leakage currents of the capacitor and switch and the output amplifier bias current.

2. Hold-mode feed-through is the percentage of input signal transferred to the output when the sample switch is open. is measured with a sinusoidal input signal and caused by capacitive coupling.

Critical phase of sample-hold operation

Sample-to-hold offset (or step) error is the change in output voltage from the sample mode to the hold mode, with a constant input voltage. It is caused by the switch transferring change onto the hold capacitor as it turns off.

Aperture delay is the time elapsed from the hold command to when the switch actually opens; it is generally much less than a microsecond.

Aperture uncertainty (or aperture jitter) is the time variation, from sample to sample, of the aperture delay. It is the limit on how precise is the poi time of opening the switch.

DATA ACQUISITION

Data acquisition is the process of sampling signals that measure real world physical conditions and converting the resulting samples into digital numeric values that can be manipulated by a computer.

Data acquisition systems, abbreviated by the acronyms DAS or DAQ as it is often referred, is the process of digitizing data from the world around us so it can be displayed, analyzed, and stored in a computer.

A simple example is the process of measuring the temperature in a rooms a digital value using a sensor such as a thermocouple.

COMPONENTS OF A DATA ACQUISITION SYSTEM

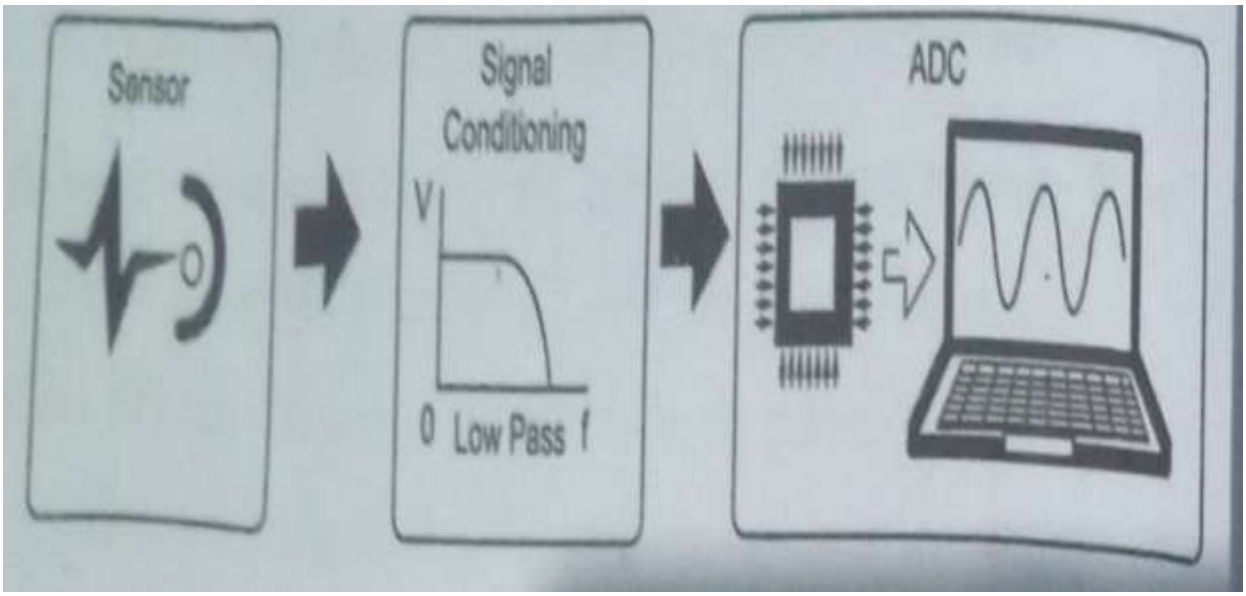

1. Analog-to-Digital Converter (ADC).
2. Sensors
3. Signal Conditioning

i.Analog-to-Digital Converter (ADC)

At the core of all data acquisition systems is an Analog Digital As the name implies, this chip takes data from the environment and Converter (ADC)

Converts to discrete levels that can be interpreted by processor.

These discrete levels correspond to the smallest detectable change in the signal being measured.

The higher the number of an ADC (12-bit, 16-bit, 18-bit the greater the number of discrete levels that can represent an analog signal and the greater the resolution of the ADC.

The resolution of an ADC is essentially analogous to the measuring stick. A measuring stick with tick has more resolution than measuring stick with only tick marks

ii. Sensors

Sensors, often called transducers convert real world phenomenon like temperature, force, and movement to voltage or current signals that can be used as inputs to the ADC.

Common sensors include thermocouples, thermistors, and RTD to measure temperature, accelerometers to measure movement, and strain gauges to measure force.

When choosing the right sensor for your measurement important to consider factors like the accuracy of the sensor and the signal conditioning required to record readable signal.

iii. Signal Conditioning

To make quality measurements transducers, additional needed between the transducer and the ADC.

This circuitry is generally referred to signal conditioning and include amplification attenuation, Wheatstone bridge completion, excitation, linearization, calibration and cold-junction compensation (CJC)

Different sensors have different signal conditioning needs. For instance, signal conditioning for a strain gauge requires excitation, bridge completion and calibration.

DIGITAL DATA ACQUISITION SYSTEM

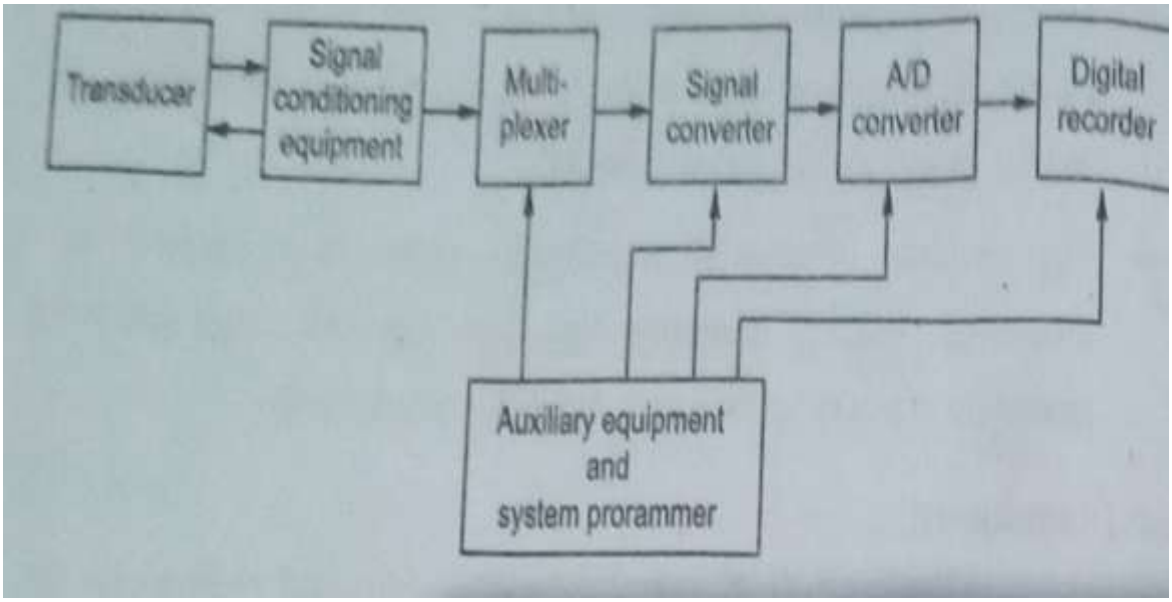

1. Transducers

They convert a physical quantity into an electrical signal which is acceptable by data acquisition system.

2. Signal Conditioning

Equipment Signal conditioning has already been described in details in chapter,

3. Multiplexer

Multiplexing is the process of sharing a single channel with more than one input. multiplexer accepts multiple analog inputs and connects them sequentially to one measuring instrument. Another name for a multiplexer is "scanner"

4. Signal Converter

A signal converter translates the analog signal to form acceptable by the analog to digital (AND) converter. An example of the signal converter is an amplifier for living the low-level signal voltages produced by transducers.

5. Analog to Digital Converter (A/D Converter)

An A/D converter converts the analog voltage to its equivalent digital form. The output out of the A/D converter may be fed to digital display devices for visual display or may be fed to digital recorders for recording. It may be fed to a digital computer for data reduction and further processing.

6. Auxiliary Equipment

This contains devices for system programming functions and digital data processing. Some of the typical functions done by auxiliary equipment are linearization and limit comparison of signals. These functions may be performed by individual devices or by a digital computer.

7. Digital Recorders

Records of information in digital form may be had on punched cards, perforate paper tapes, typewritten pages, floppy disk, magnetic tape, or a combination these systems.

8. Digital Printers

After all the tests have been completed and the data generated, it becomes necessary to record the numbers and in some cases reduce the data to more meaningful form.

USES OF DATA ACQUISITION SYSTEMS

Data acquisition systems are being used in ever increasing, large and wide fields in a variety of industrial and scientific areas, including the aerospace, biomedical and telemetry industries.

The type of data acquisition system to be used depends upon the application and the intended use of recorded input data. Analog data acquisition systems are used when wide frequency width is required or when lower accuracies can be tolerated.

Digital data acquisition systems are used when the physical quantity being monitored has a narrow bandwidth (ie., when the quantity varies slowly).

Digital systems are also used when high accuracy and low per channel cost is required.

Digital data acquisition systems are in general, more complex than analog systems, both in terms of instrumentation involved and the volume and complexity of ne data they can handle.

SINGLE CHANNEL DATA ACQUISITION SYSTEM

A Single Channel Data Acquisition System consists of a signal conditioner followed by an analog to digital (A/D) converter, performing repetitive conversions at a free running, internally determined rate.

The outputs are in digital code words including over range indication, polarity information and a status output to indicate when the output digits are valid.

The digital outputs are further fed to a storage or printout device, or to a digital computer device, or to a digital computer for analysis.

The popular Digital panel Meter (DPM) is a well known example of this. However, there are two major drawbacks in using it as a DAS.

It is slow and the BCD has to be changed into binary coding, if the output is to be processed by digital equipment.

While its free running, the data from A/D converter is transferred to the interface register at a rate determined by DPM itself, rather than commands beginning from the external interface

ANALOG TO DIGITAL CONVERTERS (A/D)

Analog to digital converters used for DAS applications designed to receive external commands to cover and hold. For de ad low frequency signals.

The advantage is that it has a linear averaging capability and has a null response for frequencies harmonically related to the federation period.

A/D converters based on dual slope techniques are useful for conversion of low frequency data, such as from thermocouples, especially in the presence of noise. The most popular type of converter free data System applications is the successive approximation type.

Higher speeds are obtained by preceding the A/D converter by a semple hold (S/H).

Direct digital conversion carried out near the signal source is very advantageous in cases where data needs to be transmitted through a noisy environment.

PRE-AMPLIFICATION AND FILTERING

Many low resolution (8/10 bit) AD converters are constructed with single ended input and have a normalised analog input range of the order of 5-10 V, bipolar or unipolar.

For signal levels which are low compared to input requirements, amplification may be used in order to bring up the level of the input to match converter input requirements, so that optimum use can be made in terms of accuracy and resolution.

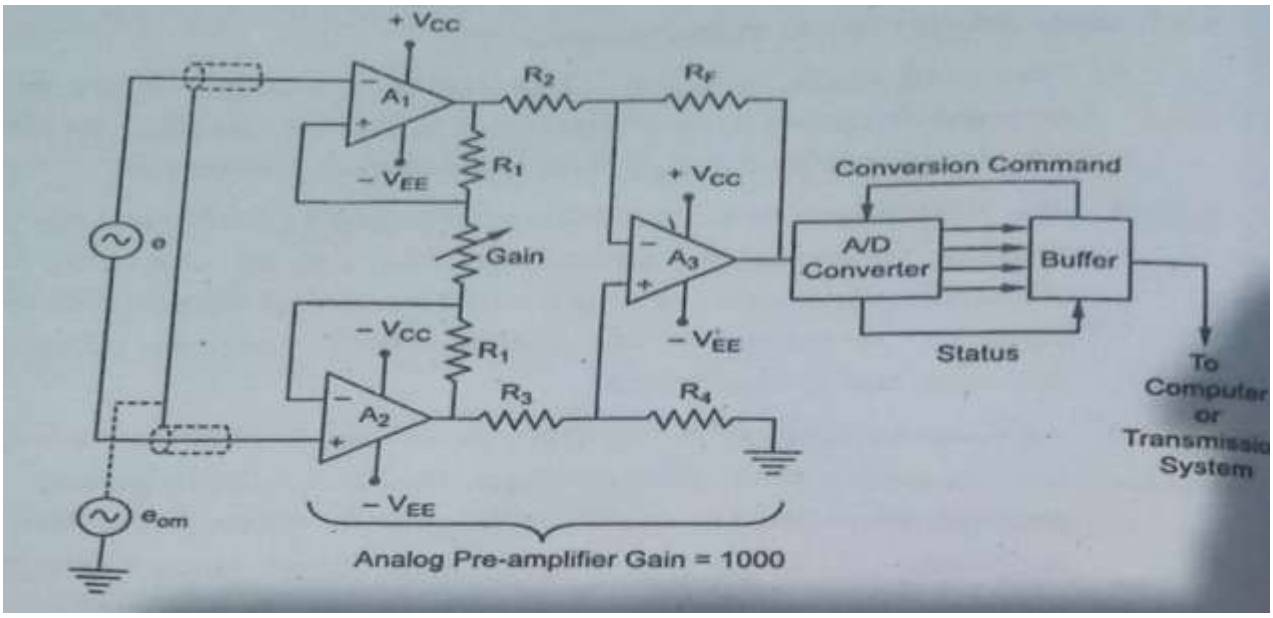

If the signal levels are below a tenth of an mV, or when resolution of 14 bits or 16 bits is needed, the use of differential amplifiers can become necessity

When differential output has to be handled from a bridge network, instrumentation amplifiers are employed.

The accuracy, linearity and gain stability specifications should be carefully considered, to ensure the system is not affected by any limitations.

If the input signals are to be physically isolated from the system, the conductive paths are broken by using a transformer coupled or an opto-coupled isolation amplifier.

These techniques are advantageous in handling signals from high voltage sources and transmission towers. In biomedical applications such isolation pre-amplifiers can be coupled with active filters before processing of data, becomes essential. in order to minimize the effect of noise carriers and interfering high frequency components.

They effective compensate for transmission sensitivity loss at high frequency and hence enable measurements over an enhanced dynamic frequency range.

Special purpose filters, such as tracking filters, are used for preserving phase dependent data.

MULTI CHANNEL DATA ACQUISITION SYSTEM

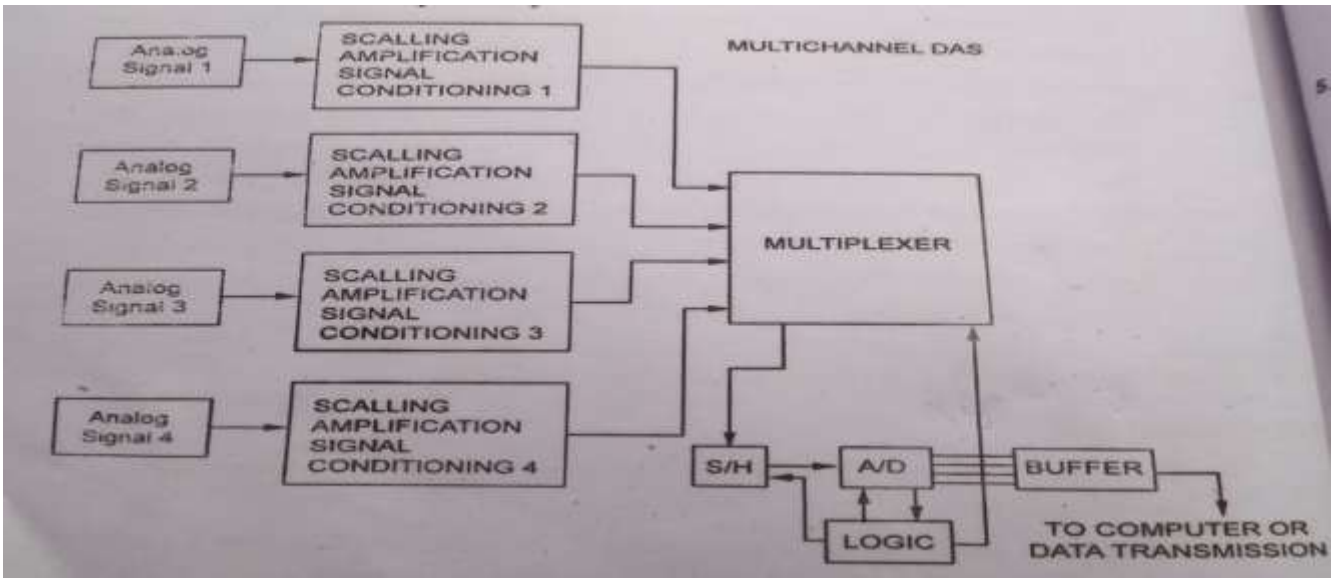

MULTIPLEXING THE OUTPUTS OF S/H

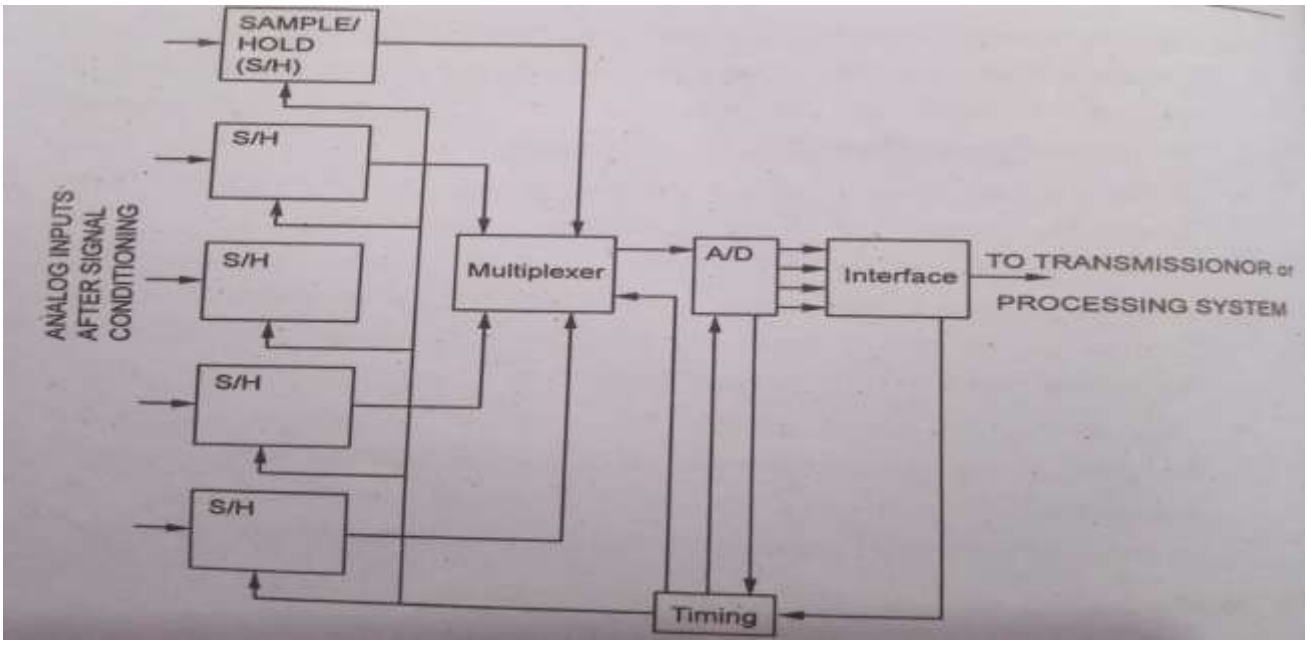

MULTIPLEXING AFTER A/D

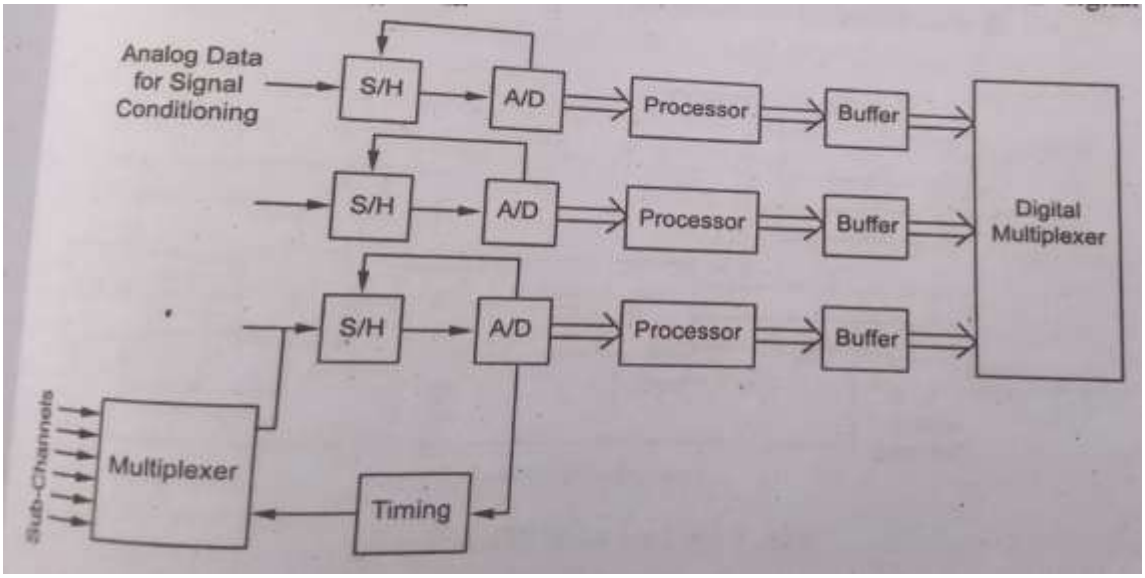

DATA LOGGERS

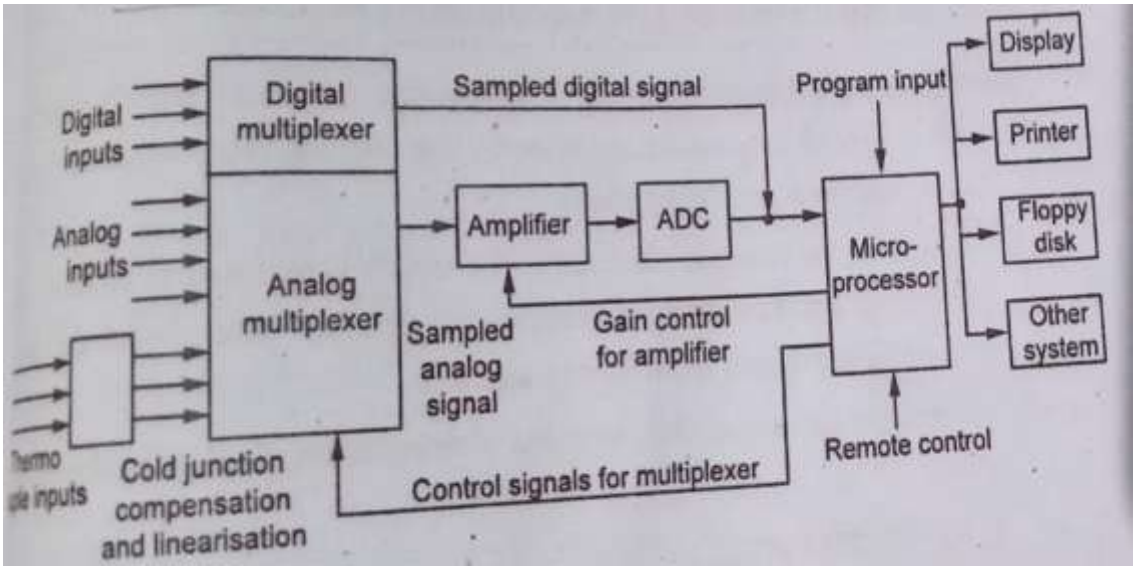

TORQUE AND POSITION SENSORS

A torque sensor is a device for measuring and recording the torque on a rotating system, such as an engine, crankshaft, gearbox, transmission, rotor, etc.

Static torque is relatively easy to measure.

Dynamic torque is not easy to measure, since it generally requires transfer of some effect (electric, hydraulic or magnetic) from the shaft being measured to a static system.

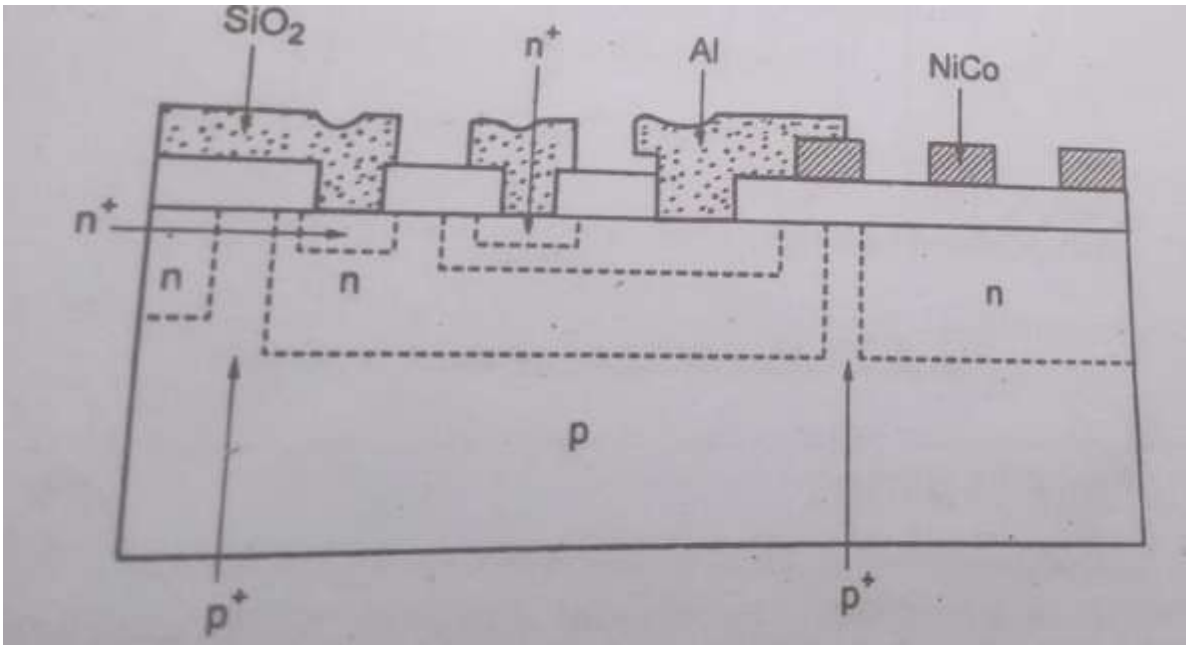

The magnetic characteristics of these domains will vary according to the applied torque and thus can be measured using non-contact sensors.

Such magnetoelastic torque sensors are generally used for in-vehicle applications on race cars, automobiles, aircraft and hovercraft.

The power trains by which an automobile is run consists of the engine itself, the transmission line, differential gear, axle and wheels. The torque generated in the engine is distributed to the wheels through power trains,

A torque sensor for each component at appropriate position of the power train provides quick and precise response to power controls.

Non-contact sensor is found to be suitable for practical adaptability such sensor is miniature in size and works on the magneto resistive effect and which can be installed in main bearing and hence, mean output torque can be detected for multi-cylinder engine with a single sensor.

Position sensing is another important aspect in automobiles for detecting shaft position, engine speed, throttle position, potentiometer position and so on. Here also non-contact sensors receive preference.

The semiconducting sensors such as Hall and magneto resistive ones and the other varieties such as ferromagnetic, electromagnetic pick up, optical modular device, wiegand wire and capacitive modular device are also considered suitable.

For electromagnetic pickup, proximity sensors are most commonly used because of high resolution and low cost offered.

Integrated magnetic sensor using ferromagnetic resistive element is also being increasingly used.

It has high sensitivity at low magnetic field and comparatively less sensitive to temperature variations.

MOUNTING OF PROXIMITY SENSOR

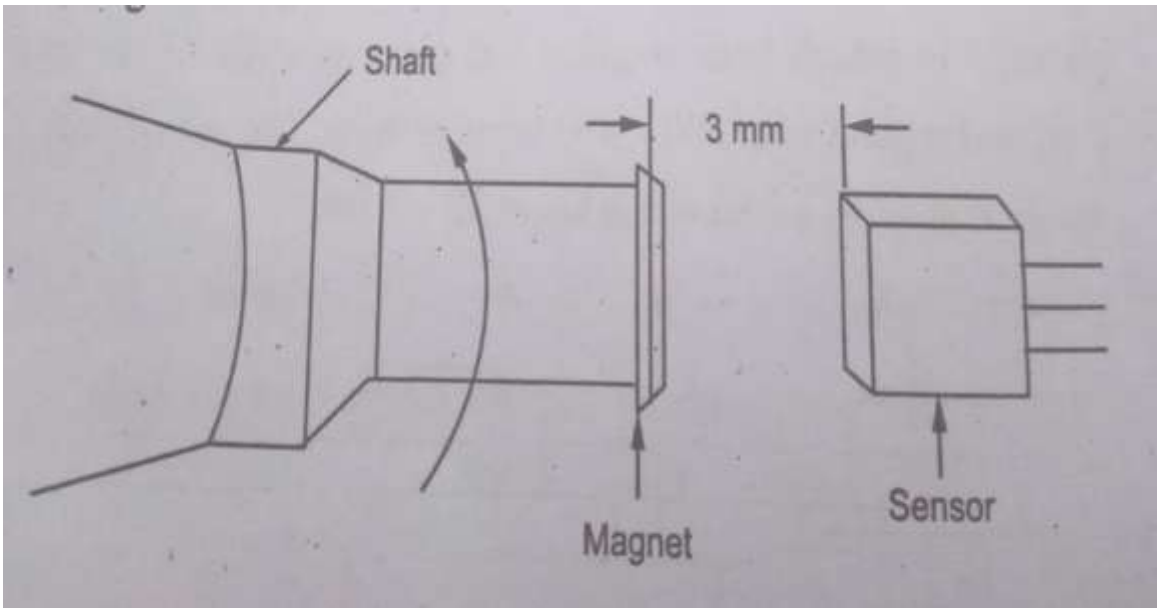

AEROSPACE SENSORS:

1) Static pressure sensors

2) Temperature sensing

3) Fluid velocity sensors

4) Sensing direction of Air-flow,

5) Strain, Force, Thrust and Acceleration monitoring sensors

STATIC PRESSURE SENSORS

In general, the static pressure sensor is a differential pressure sensor designed to monitor the difference in pressure between the inside and outside of a building

Its features are

1) Differential pressure sensor.

2) Easy installation and configuration.

3) Rugged enclosure (corrosion resistant, water resistant and fire retardant

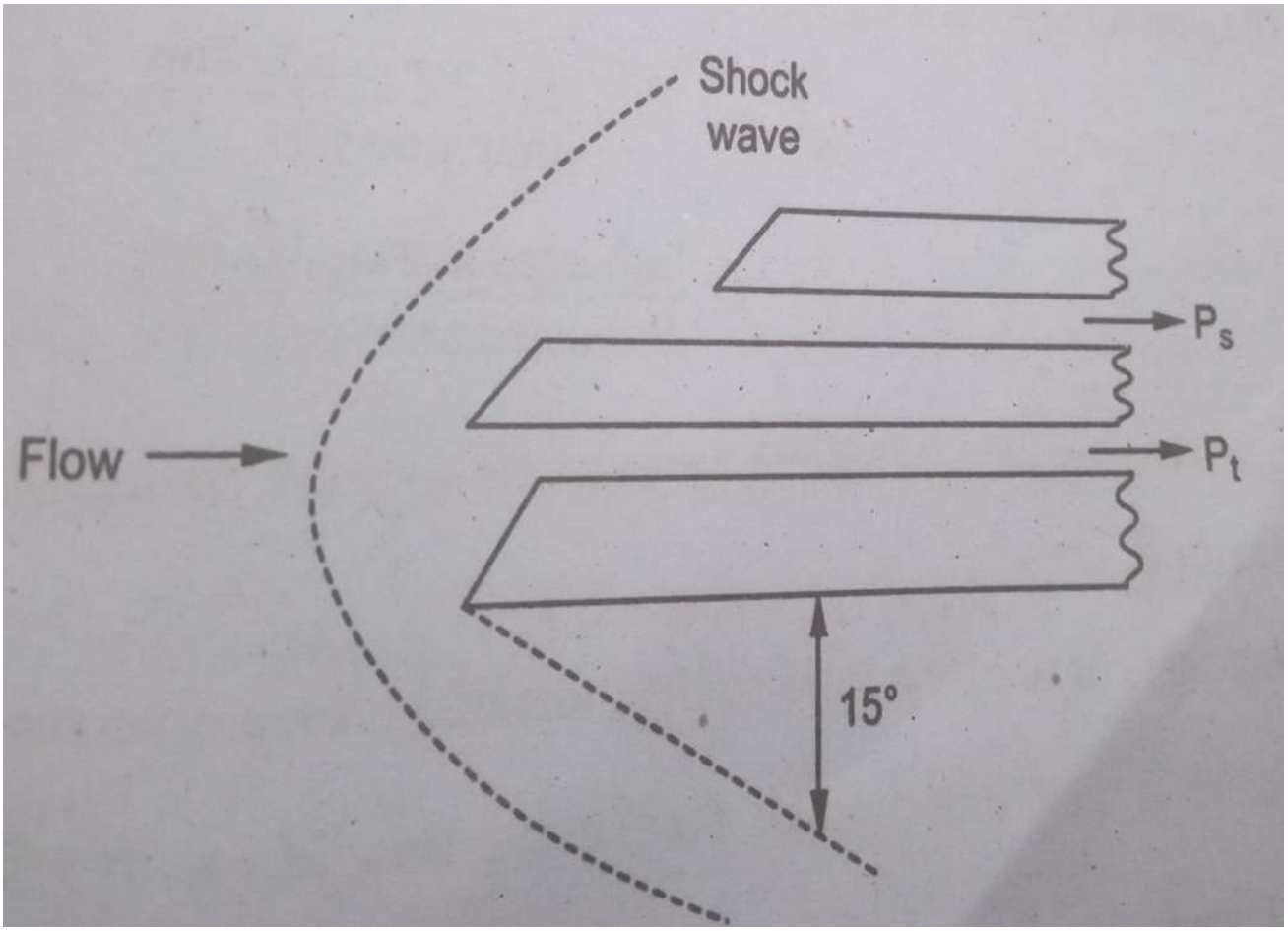

In aerospace, the static pressure sensor is used to monitor vertical speed static pressure (ie.) for altitude and time rate of change of altitude.

For this, probes are used which are Pitot tubes of appropriate design and require to be aligned accurately.

Besides length, nose shape and cross section of the probe are also equally important.

For supersonic flow, there is a difference in the actual pressure P, and the indicated static pressure.

Correction and evaluation of static pressure, is possible by Mach number versus pressure ratios curve.

Mach number is the ratio of speed of the body to the speed of the sound in the surrounding medium.

Mach number =Object speed /speed of sound

Pressure ratios=Indicated static pressure / static pressure

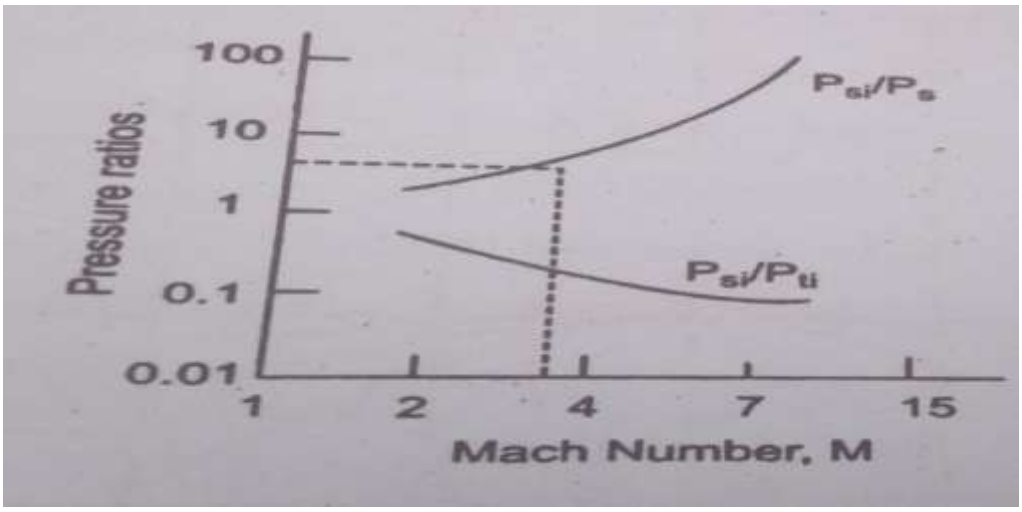

TEMPERATURE SENSING:

Static temperature is the simple streamline temperature needed to establish the acoustic speed and hence, the gas velocity from the knowledge of Mach number M. It is denoted as Ts.

Total temperature is denoted as Ts.

It is the one that gas acquires if it is isotropically stagnated.

Stagnated means gas to not move or flow, often resulting in it becoming dirty.

For measurement of temperature, usually two types of probes are used.

1.RTD (Resistance Temperature detectors)

2.Thermocouple

In the aerospace terminology, these sensors are called 'temperature sensitive elements (TSE).

For measure of success of stagnating two parameters should be considered

1.Recovery ratio

2. Recovery factor

FLUID VELOCITY SENSORS

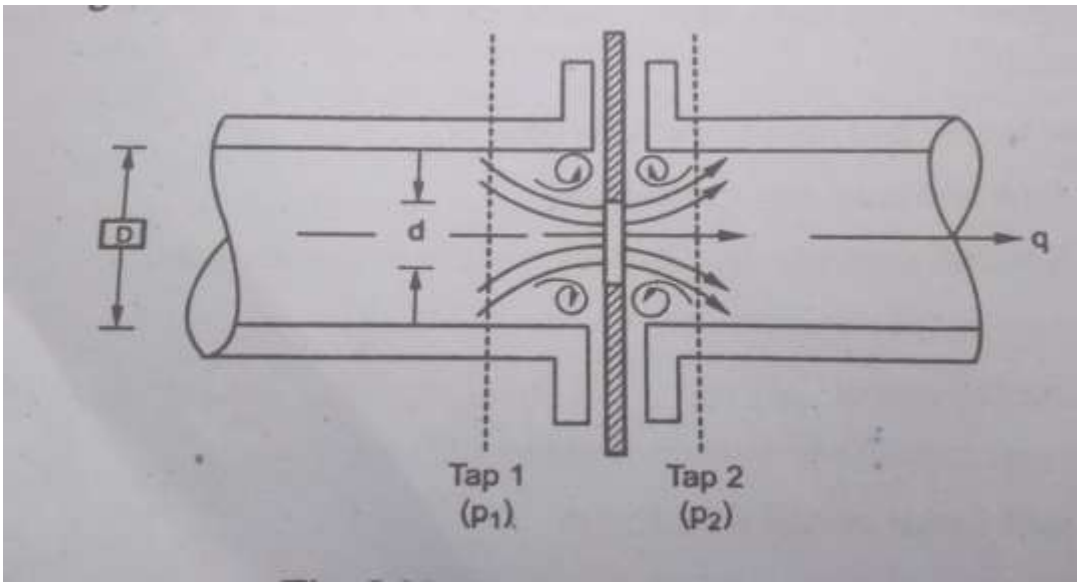

SENSING DIRECTION OF AIR FLOW

It is important to determine the direction of air-flow in aerospace services. In core type probes or probes resembling core or wedge, two holes on the Inclined surfaces that lie diametrically opposite to each other are used.

The difference of the pressures of these two taps is measured which is more or less proportional to the angle between the axis of the probe and direction of air-flow.

There are variations in the design of probe and hole positions.

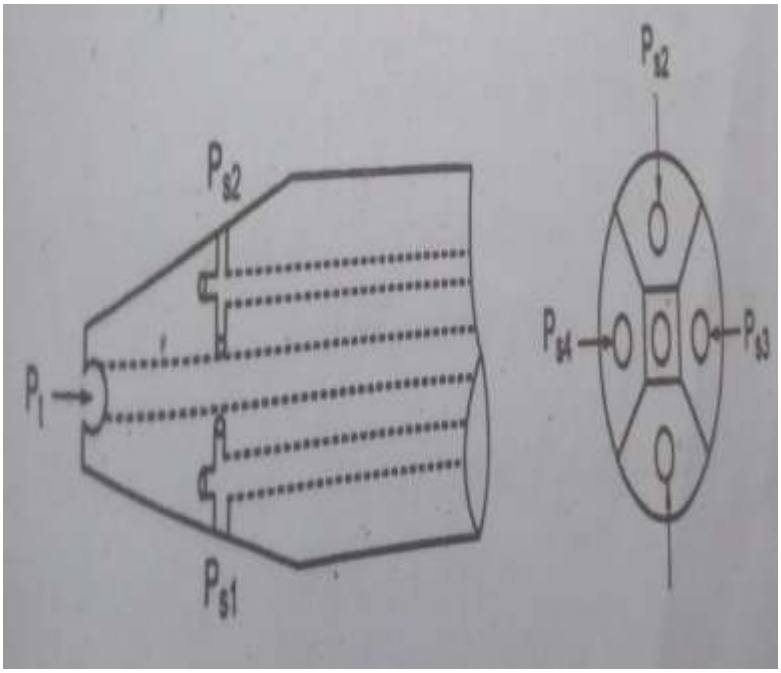

MEASURING AIR-SPEED ON AIRCRAFTS

Air speed on aircraft can be computed from the measurement of total pressure (P), temperature (T) and static pressure (P) using the ideal gas equations.

1.The equations use ideal gas laws

2. Change in specific heats with temperature occurs at high temperatures due to increased and vibrational energies.

3. A time lag appears for equilibrium between the above energies near the shock front.

3. At very high temperatures, ionization and dissociation of molecules occur and so on.

MONITORING STRAIN, FORCE, THRUST AND ACCELERATION

Aerospace research and studies involve measurement of strain, force, thrust, acceleration and so on for operation, innovation and safety consideration.

Both state and total pressures and other parameters we measured using the usual sensors such as strain gauges specially for strain and force.

Appropriate positioning of the gauges and compensation for temperature variations are to be taken care

For dynamic strain alone with fluctuation frequency of several Hertz, the gauge material is chosen to be fatigue free or to understand high fatigue.

Load cells are also made of strain gauges bonded to a spring whose deflection is sensed.

Load cells are wed for weighing aircrafts sold for measurements of thrust forces.

Engine thrust of a rocket is sensed or determined in the test center from the integral of dynamic pressure which is measured by an army of total head (pressure) tubes at the exhaust,

Acceleration measurement in an aircraft is very important during acrobatics movements or gusts when stressed in the structures increases and require to be obtained by correlating stress with acceleration.

HOME APPLIANCE SENSOR

Semiconductor technology has grown fast over a last few decades leading to development of micro miniaturized processors, circuits.

Sensors enhancing the capabilities of home appliances depends largely on of automation, safety and efficiency.

Smart operation of the home appliances depends largely on appropriate sensors which have made the equipment more convenient, energy economic and safe.

Basically, the sensors are used in electronic control of the appliances and when coupled with microcomputers, all these requirements are almost fully met.

Therefore, the basic requirements for the sensors for home appliances can now be revisited as they must have low cost, small size, light weight, better reliability, and easy reliability, and cash handling.

The sensors used in home appliances are nothing new though the tendency is to miniaturize them retaining the reliability and efficiency. Sensors so used belong to all categories, that is, mechanical, chemical, magnetic, temperature, and radiation types - the last two types having major applications. In the mechanical category, silicon pressure sensors, metal diaphragms, and potentiometers are also used in washing machines.

Radiation sensors, that is photodiodes, and phototransistors are used as the major elements in refrigerators, washing machines, air-conditioners, TV sets, CD players, stereo players, and video disc players.

Photoresistors such as CdS are used in TV sets while VCR camera uses charge control device (CCD) image sensors and MOS image sensors.

The pyroelectric IR sensor used in microwave ovens comes, in general, in TO package.

It consists of a L/TO, pyroelectric element on a silicon base plate and is irradiated through a silicon window.

Its responsivity is 200 - 300 V/W, NEP is less than 2 n W/Hz, response time is around 0.2s, temperature range is - 20°C to 100°C, and with silicon window.

Sensors used in washing machine

In a microprocessor controlled washing machine, water level is sensed using optics principles that comprise units like a light emitting diode (LED), photodiode/phototransistor, and a light slit.

The light slit moved by the water level.

This type of sensor is also used in rinsing chambers for the detection of rinsing which provides information about the concentration of residual detergents.

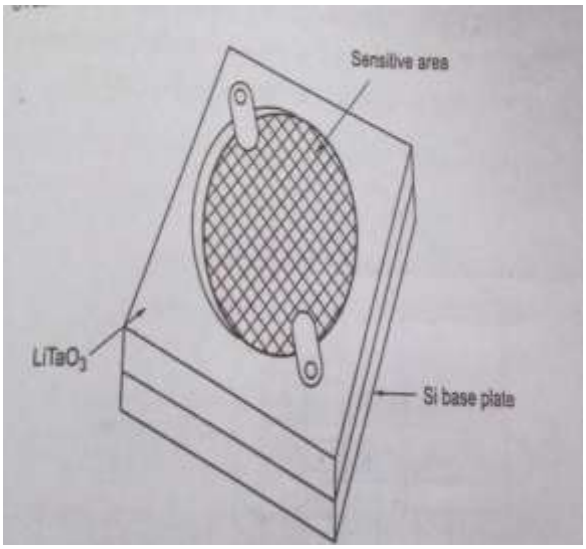

The sensor used for spin dry system in washing machines is a PZT ceramic sensor.

It is based on the principle that when water drips on to the surface of the sensor, voltage developed in the sensor becomes less with more impinging force of water on it.

At the clothes are dried, voltage also increases, PZT is a solid solution of lead zirconate and lead titanate, it is belongs to perovskite structures.

Piezoelectric property depends on T/2, T/Z) ratio. Most ceramic piezoelectric transducers belong to this group.

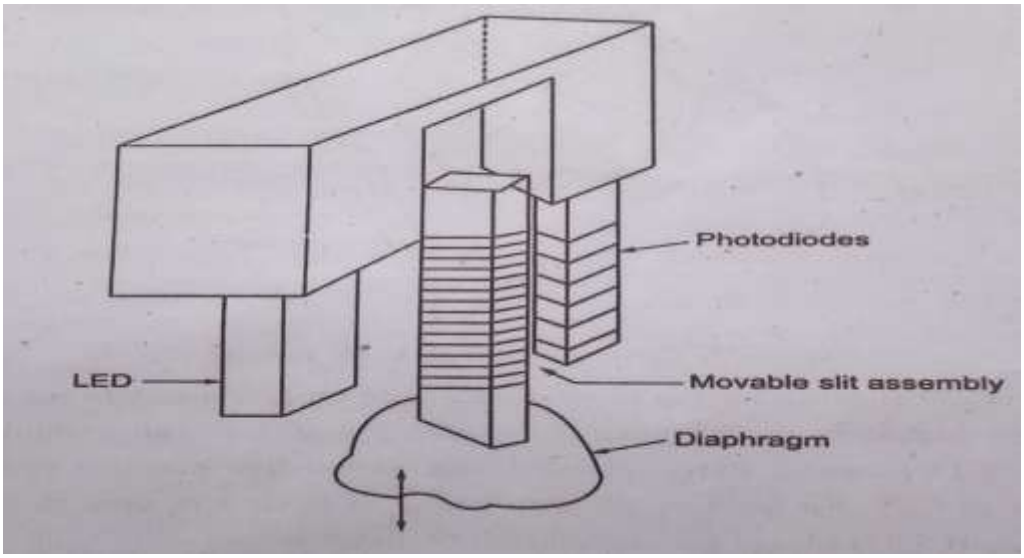

Photodiode-LED assembly has also been used for frost detection in refrigerators.

With frost, the light intensity received by the photodetector is reduced as in the case of a rinsing system.

An alternative system for this use is piezo crystal oscillator and a PTC thermistor system.

The crystal in an oscillator circuit vibrates at its natural frequency and with frost formation, its resonance frequency changes. PTC thermistor heats the crystal for making it frost free.

HOUSE AUTOMATION SYSTEM

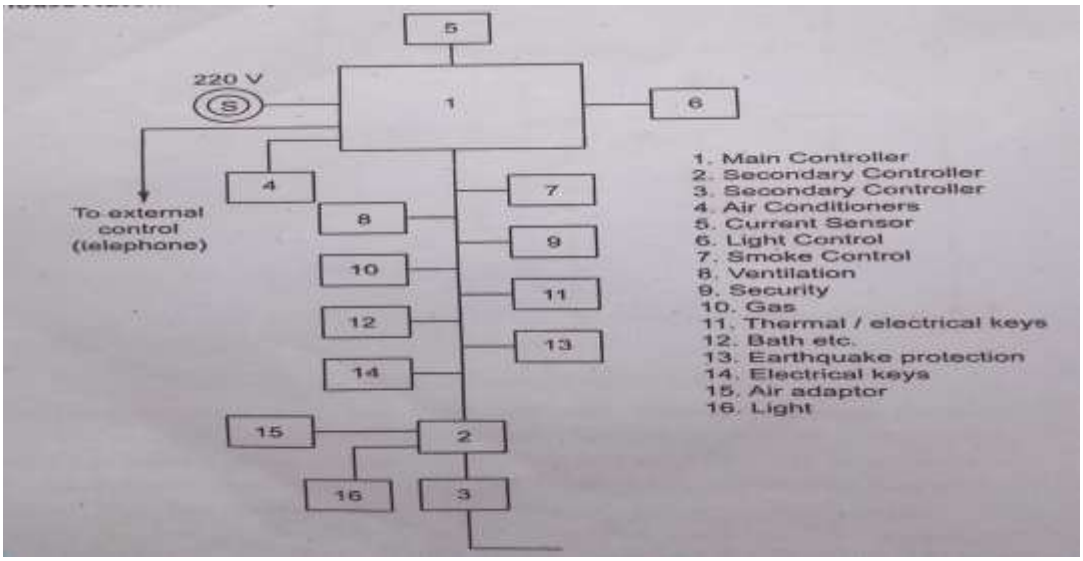

SENSORS FOR MANUFACTURING

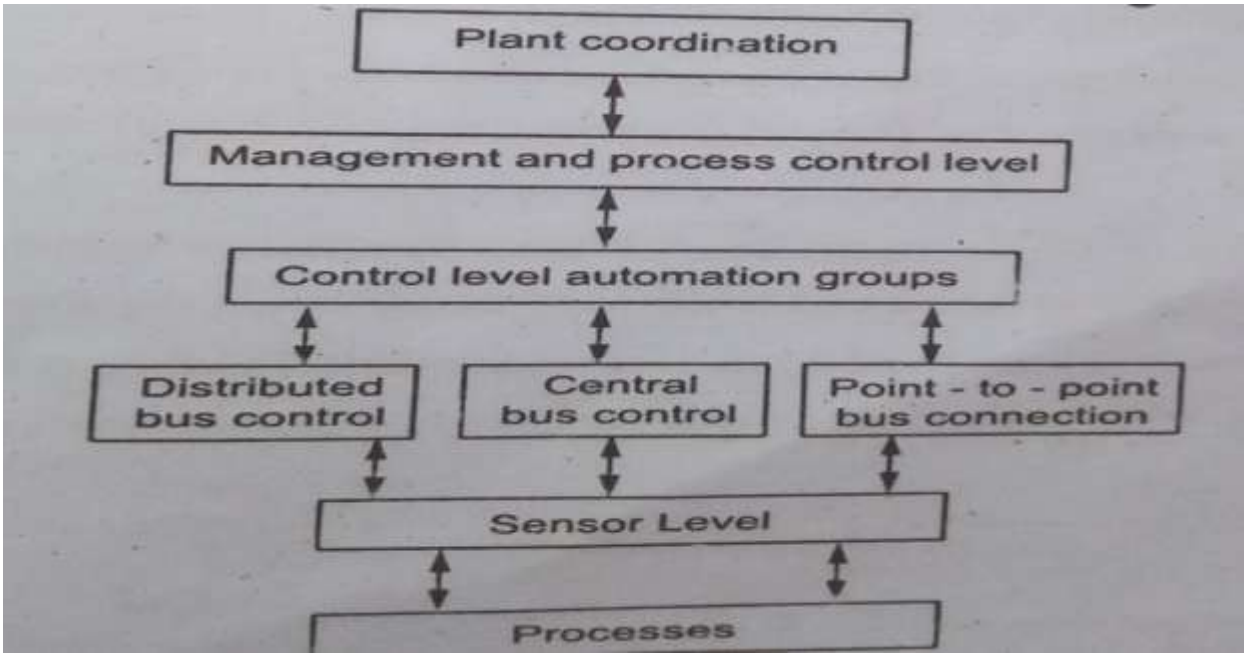

SENSORS FUNCTIONS

Sensors used in production processes have to perform functions which are not conventional process control functions. The Fig.5.40 depicts the sensor functions briefly.

They are not always as distinct as indicated in the diagram but may be performing in combination on demand.

Most of the sensors used have been considered earlier but for robotic actions, specific sensors are applied in production engineering.

Sensors used in such actions are discussed in this subsection with the actions for which they are meant for.

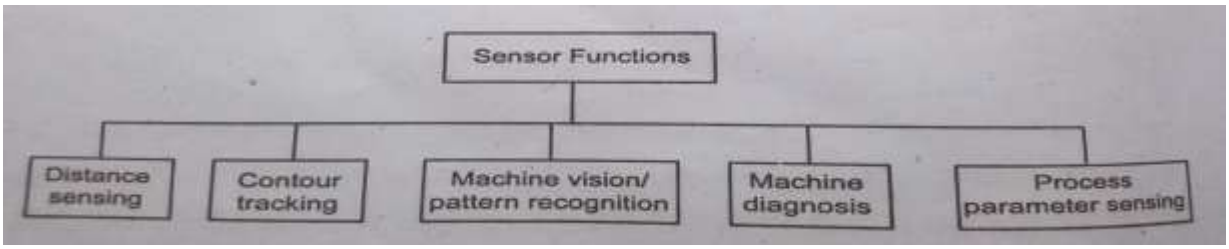

DISTANCE SENSING:

During processing, the workpiece and the tool face the possibility of collision.

Therefore, the distances between the two for various operations need be monitored.

In some processing operations, the distance between the two should be maintained constant as in lase cutting.

Sensors for distance measurement are of two types, namely contact type and non-contact type.

The non-contact type is gaining ground because the sensors in this typo are free from wear and tear.Contact type distance sensors are common meteorological instrument components such as pins, gauge blocks, dial gauges, and many others. Switches and buttons with potentiometric or inductive pick-up are also used.

In the non-contact type distance sensors, inductive, capacitive, acoustic, and optical techniques are adopted.The inductive pick-ups are designed and named proximity sensors.

Single coil and multi-coil designs are also common.

Multi-coil designs allow to measure the distance in two coordinates.

EXAMPLE OF INDUCTIVE PROXIMITY SENSOR

The middle coil , coil 2, is fed with ac of appropriate frequency allowing it to produce an ac magnetic field in its own proximity.

Coil 1 and coil 3 symmetrically positioned with respect to coil 2 are also electrically energized with phase opposition with respect to supply of coil 2 in absence of any metallic body approaching the set up (coils 1 and 3).

With any metallic body approaching, as shown, the magnetic field distributions to coils 1 and 3 change and a signal is generated which can be seen to be proportional to the distance and angle between the body and the coil (s).

Ultrasonic sensors housed in robot gripper utilize the period between the reflected pulse (echo) and the original pulse sent by transmitter for distance measurement.

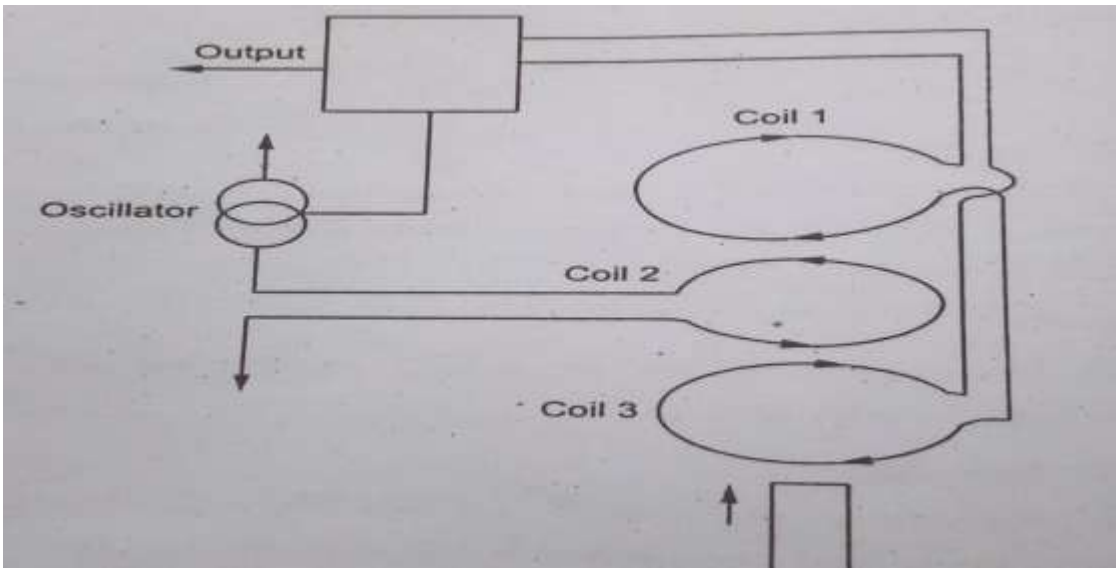

Contour tracking

In optoelectronic technique of distance sensing, a laser beam is focused o the approaching body and its reflection is then detected by a properly aligned photodiode after being converged by a lens.

This can be detect either

(i) The intensity of light

(ii) The angle of approach. The second technique is known as optical Triangulation.

The detector system consists of about 1000 diodes arranged in an array which can help to enhance resolution.

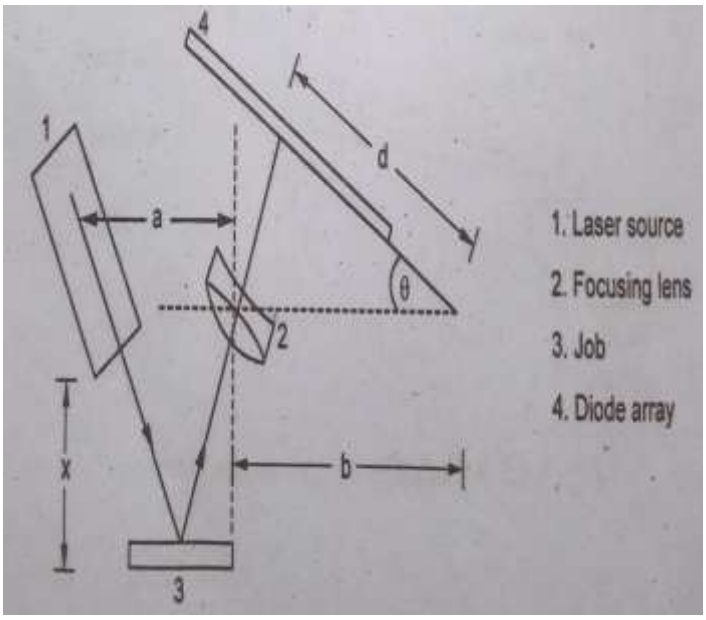

Machine Vision:

Machine vision is an intelligent sensing system. It involves scanning the object with a video camera whose output is converted to digital by an ADC for image processing, and feature computing and identification.

Then comparison with model, called pattern recognition, is performed for the desired output. The system obviously requires a very sensitive viewing of the object with adequate resolution and discrimination. Images are obtained by

(i) ultrasonic transducer scanner

(ii) X-ray scanner

The transducers so used may be conducting rubber type, the capacitance type, or piezoresistive type. The rubbing pressures produce change in resistance in the conductive rubber type transducers while capacitance changes in the second even touching.In the piezoresistive transducer, the normal piezoresistive action take place.The scanned output obtained from a multiplexer may be stored. Response time of each sensors is less than 1 ms per 100 units in an array.

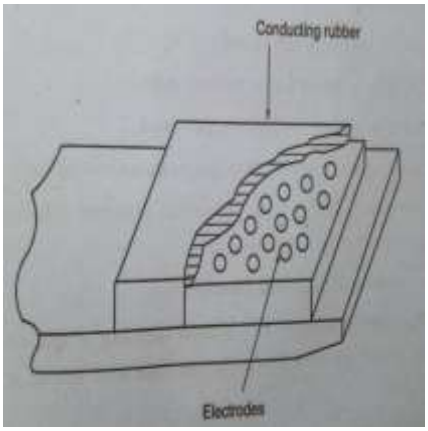

Machine diagnosis:

For machine diagnosis, the techniques applied are

(i) Process parameter monitoring,

(ii) Power consumption by the machine and edges of work-pieces (their condition)

(iii) Force and torque sensing, and

(iv) Change in the noise of the machine in operation.

The first technique is not very straightforward. In force and torque sensing, strain gauges are extensively used. Noise sensing, however, has become an important technique with the advancement of device technology.

Noise sensors are, in general, capacitive type, Often, ceramic pieces of PZT material consisting of lead zirconate and lead titanate are used for the purpose.

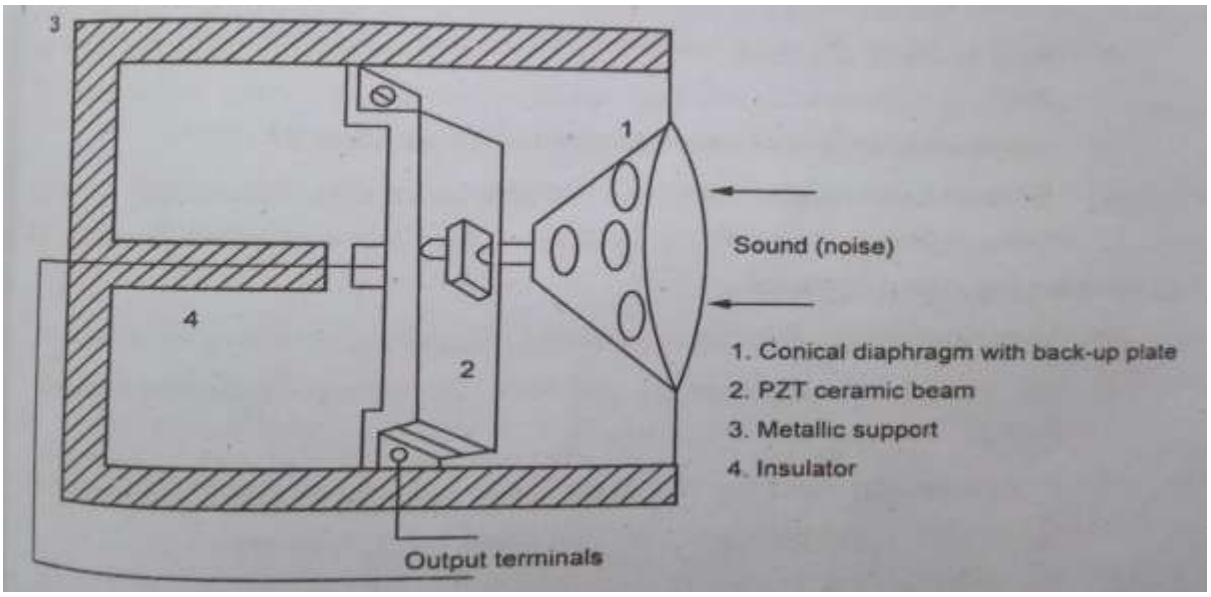
3
1
Sound (noise)
4
2
1. Conical diaphragm with back-up plate
2. PZT ceramic beam
3. Metallic support
4. Insulator
Output terminals